GESSI

44834

GPF4483400000G000

RETTANGOLO

validity date
≥ 05/2015

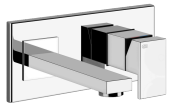

External parts for built-in mixer spout with length on request, without waste

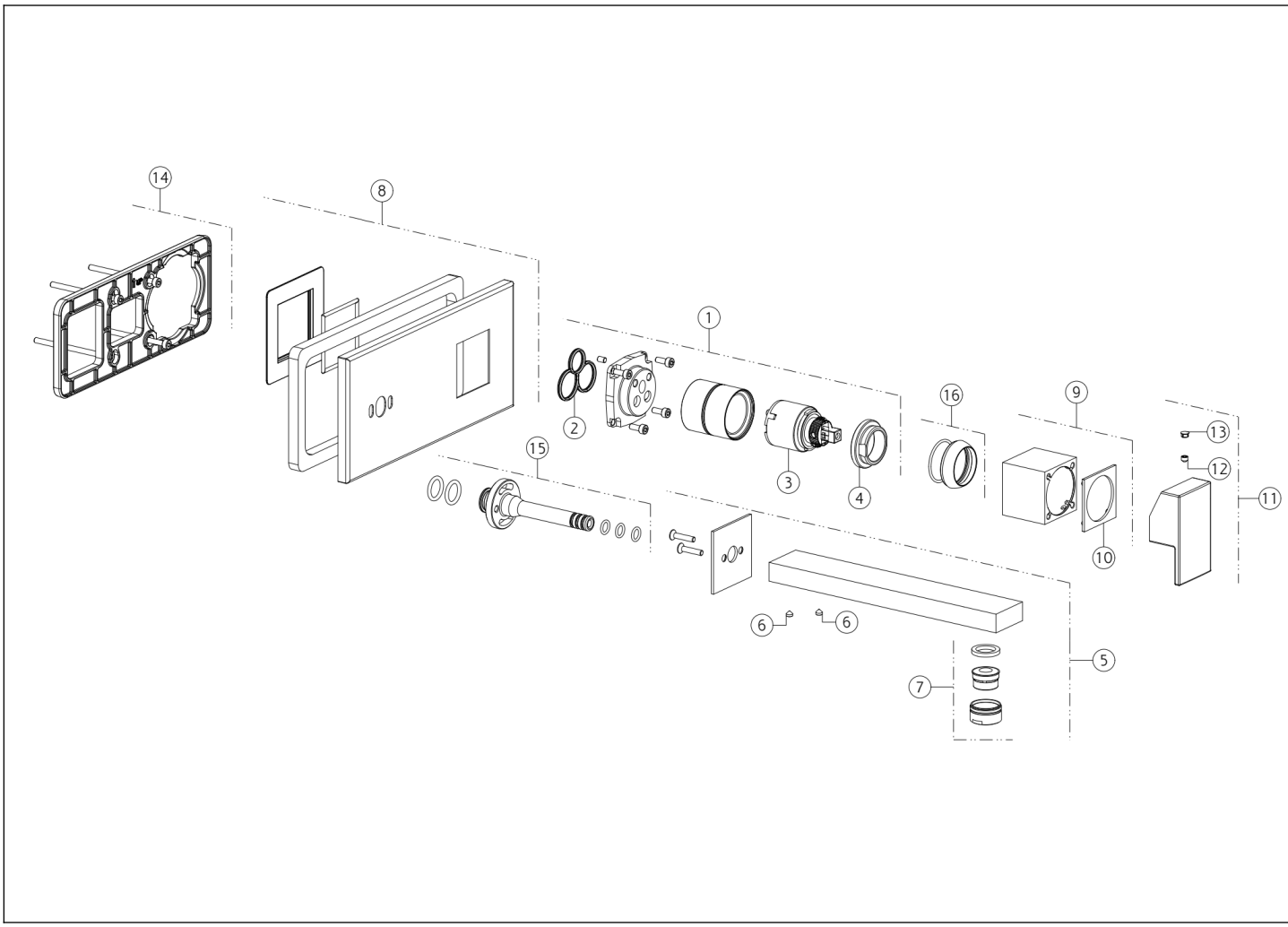

N°	Code	Description
1	SP01040	CARTRIDGE GROUP
2	SP00506	GASKET
3	SP00013	CARTRIDGE
4	SP00023	FIXING RING NUT
5	SP01173	SPOUT
6	SP00169	GRUB SCREW
7	SP01161	COMPLETE AERATOR
8	SP01172	FINISHING PLATE

N°	Code	Description
9	SP01041	FINISHED BUSH
10	SP01037	INDICATOR RING
11	SP01038	HANDLE
12	SP00610	GRUB SCREW
13	SP00002	SCREW COVER
14	SP00574	BACK PLATE
15	SP00572	JOINT
16	SP00565	FINISHING RING NUT

 This drawing, as required by law, may not be made public or reproduced without the written authorization of GESSI S.p.A. Copyright GESSI S.p.A.