GESSI

44836

validity date
≥ 06/2014

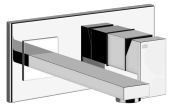

GPF44836000000G000

RETTANGOLO

External parts wall-mounted mixer, medium spout, without waste

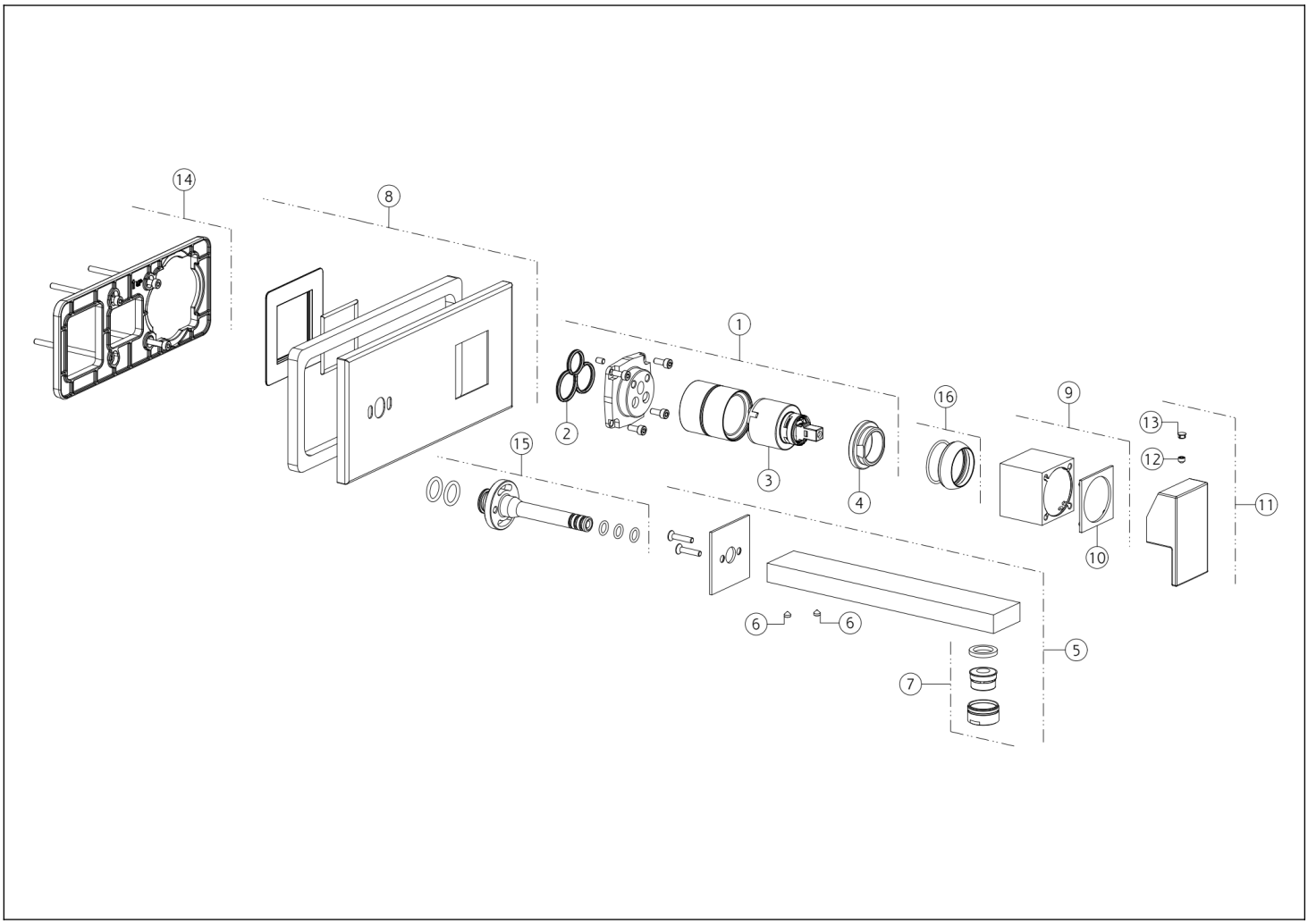

N°	Code	Description
1	SP01040	CARTRIDGE GROUP
2	SP00506	GASKET
3	SP00013	CARTRIDGE
4	SP00023	FIXING RING NUT
5	SP01174	SPOUT
6	SP00137	SCREW
7	SP01161	COMPLETE AERATOR
8	SP01172	FINISHING PLATE

N°	Code	Description
9	SP01041	FINISHING BUSHING
10	SP01037	INDICATOR RING
11	SP01038	HANDLE
12	SP00610	SCREW
13	SP00002	SCREW COVER
14	SP00574	SUB PLATE
15	SP00572	JOINT
16	SP00565	FINISHING RING NUT

 This drawing, as required by law, may not be made public or reproduced without the written authorization of GESSI S.p.A. Copyright GESSI S.p.A.