GESSI

50009

GPF50009000000G000

HELIUM

validity date
≥ 03/2015



Semi-professional single-lever swivel sink mixer with pull-out single-jet handshower.

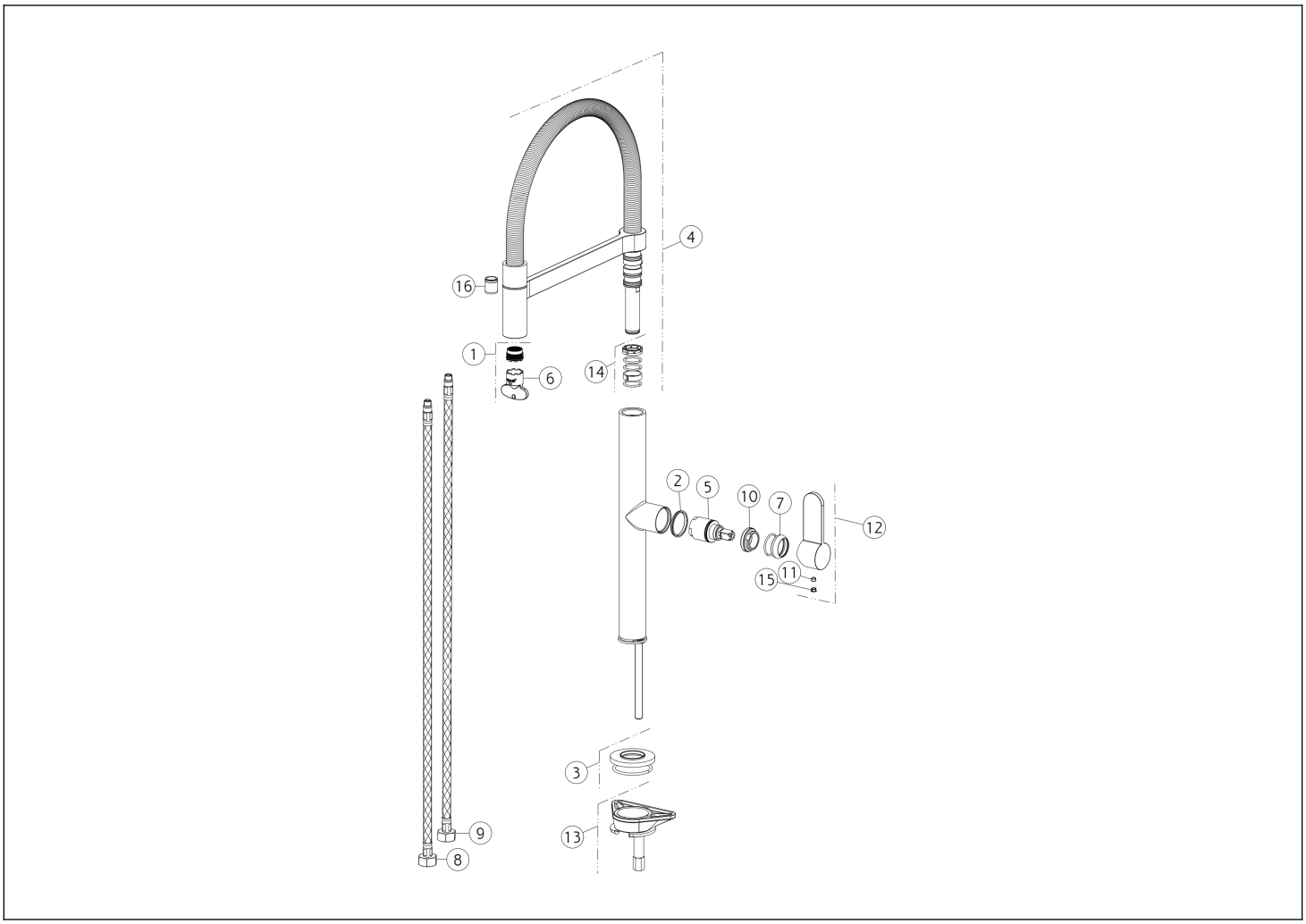

N°	Code	Description
1	SP00364	COMPLETE AERATOR
2	SP00768	INDICATOR RING
3	SP00366	BASE
4	SP00365	COMPLETE SPOUT
5	SP01210	CARTRIDGE
6	SP00363	SPECIAL TOOL
7	SP00287	FINISHING RING NUT
8	SP01591	BLU SUPPLY HOSE

N°	Code	Description
9	SP01590	RED SUPPLY HOSE
10	SP00289	FIXING RING NUT
11	SP00137	SCREW
12	SP00327	HANDLE
13	SP01155	FIXING SET
14	SP01405	GASKETS AND ANTI-FRICTION RINGS
15	SP00002	SCREW COVER
16	SP00336	NON RETURN VALVE

Gessi S.p.A. Parco Gessi, 13037 Serravalle Sesia (Vercelli) Italy Tel. +39 0163 454111 Fax. +39 0163 453150 - www.gessi.com - gessi@gessi.it This drawing, as required by law, may not be made public or reproduced without the written authorization of GESSI S.p.A. Copyright GESSI S.p.A.