GESSI

# 50107

validity date
≥ 07/2025



GPF5010720000G000

## OXYGENE

Sink mixer with retractible spout and remote control.

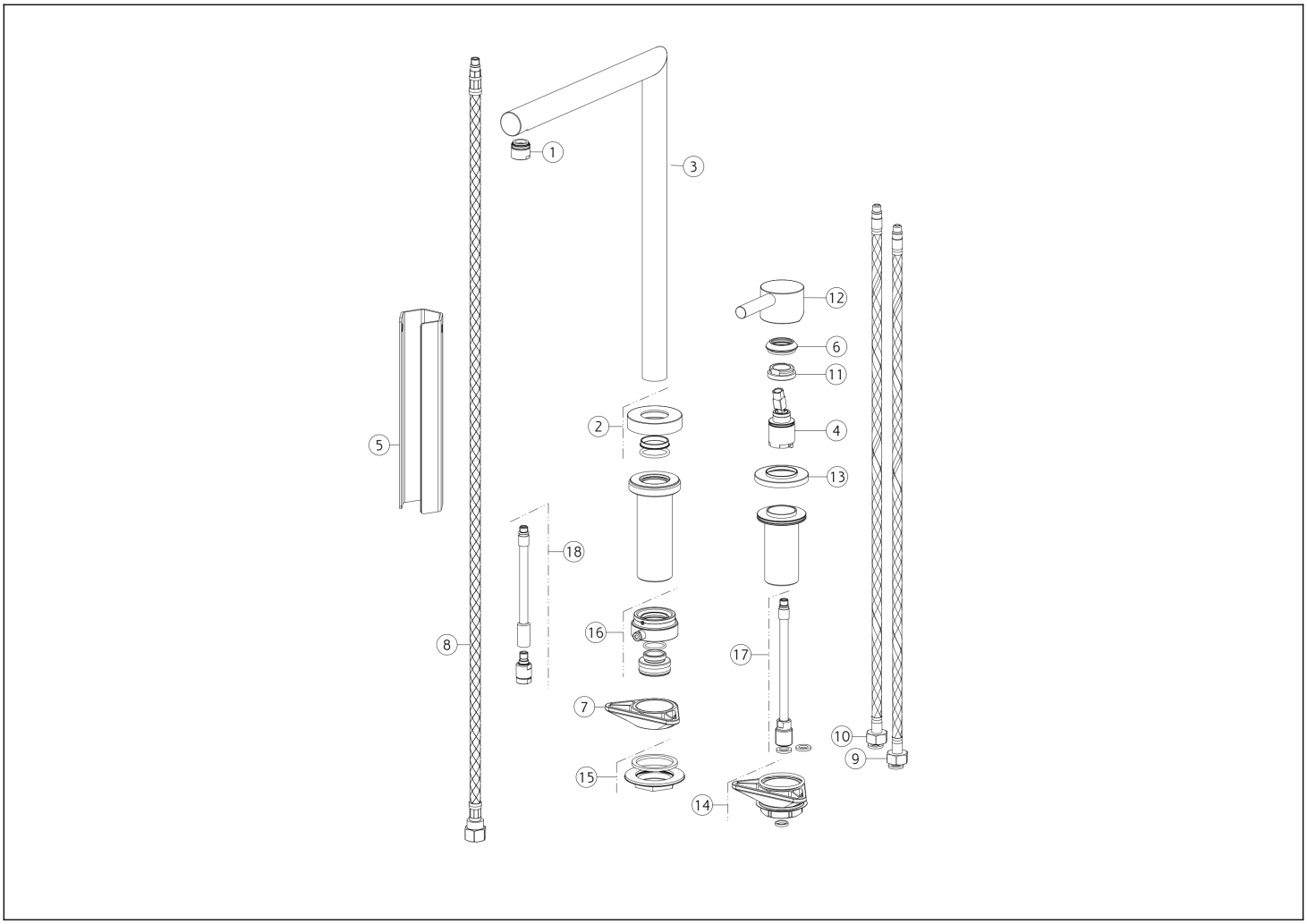


| N° | Code | Description |
|---|---|---|
| 1 | SP00437 | COMPLETE AERATOR |
| 2 | SP05399 | BASE |
| 3 | SP05403 | COMPLETE SPOUT |
| 4 | SP00446 | CARTRIDGE |
| 5 | SP00687 | SPECIAL TOOL |
| 6 | SP00484 | FINISHING RING NUT |
| 7 | SP00329 | TRIANGULAR FLANGE |
| 8 | SP02503 | HOSE |
| 9 | SP01591 | BLU SUPPLY HOSE |

| N° | Code | Description |
|---|---|---|
| 10 | SP01590 | RED SUPPLY HOSE |
| 11 | SP00684 | FIXING RING NUT |
| 12 | SP00483 | HANDLE |
| 13 | SP00444 | COVER |
| 14 | SP00462 | FIXING SET |
| 15 | SP02537 | FIXING SET |
| 16 | SP05402 | FIXING SET |
| 17 | SP00946 | TUBE |
| 18 | SP05418 | TUBE |

Gessi S.p.A. Parco Gessi, 13037 Serravalle Sesia (Vercelli) Italy Tel. +39 0163 454111 Fax. +39 0163 453150 - www.gessi.com - gessi@gessi.it This drawing, as required by law, may not be made public or reproduced without the written authorization of GESSI S.p.A. Copyright GESSI S.p.A.