GESSI

50109

GPF5010920000G000

OXYGENE

validity date
≥ 05/2025



Sink mixer with retractible spout and remote control, with pull-out single-jet handshower.

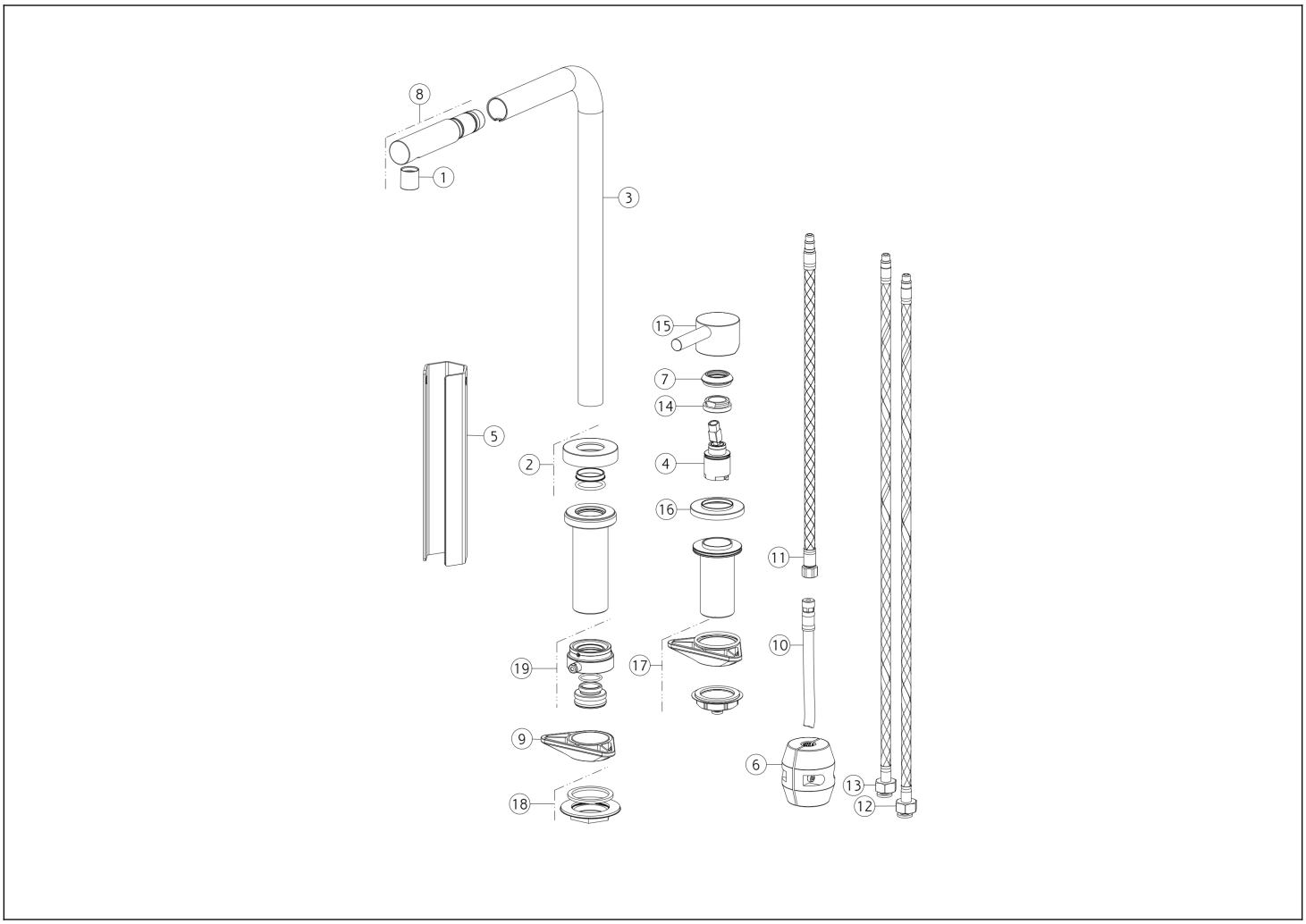

N°	Code	Description
1	SP01265	COMPLETE AERATOR
2	SP05399	BASE PLATE
3	SP05401	COMPLETE SPOUT
4	SP00446	CARTRIDGE
5	SP00687	KEY
6	SP00680	COUNTERWEIGHT
7	SP00484	FINISHING RING NUT
8	SP00434	HANDSHOWER
9	SP00329	TRIANGULAR FLANGE
10	SP01677	HOSE

N°	Code	Description
11	SP04492	HOSE
12	SP01591	BLUE SUPPLY HOSE
13	SP01590	RED SUPPLY HOSE
14	SP00684	FIXING RING NUT
15	SP00483	HANDLE
16	SP00444	ROSETTE
17	SP05201	FIXING KIT
18	SP02537	FIXING KIT
19	SP05402	FIXING KIT

Gessi S.p.A. Parco Gessi, 13037 Serravalle Sesia (Vercelli) Italy Tel. +39 0163 454111 Fax. +39 0163 453150 - www.gessi.com - gessi@gessi.it This drawing, as required by law, may not be made public or reproduced without the written authorization of GESSI S.p.A. Copyright GESSI S.p.A.