GESSI

52001

GPF52001100000G000

EQUILIBRIO

validity date
≥ 05/2019



Basin mixer

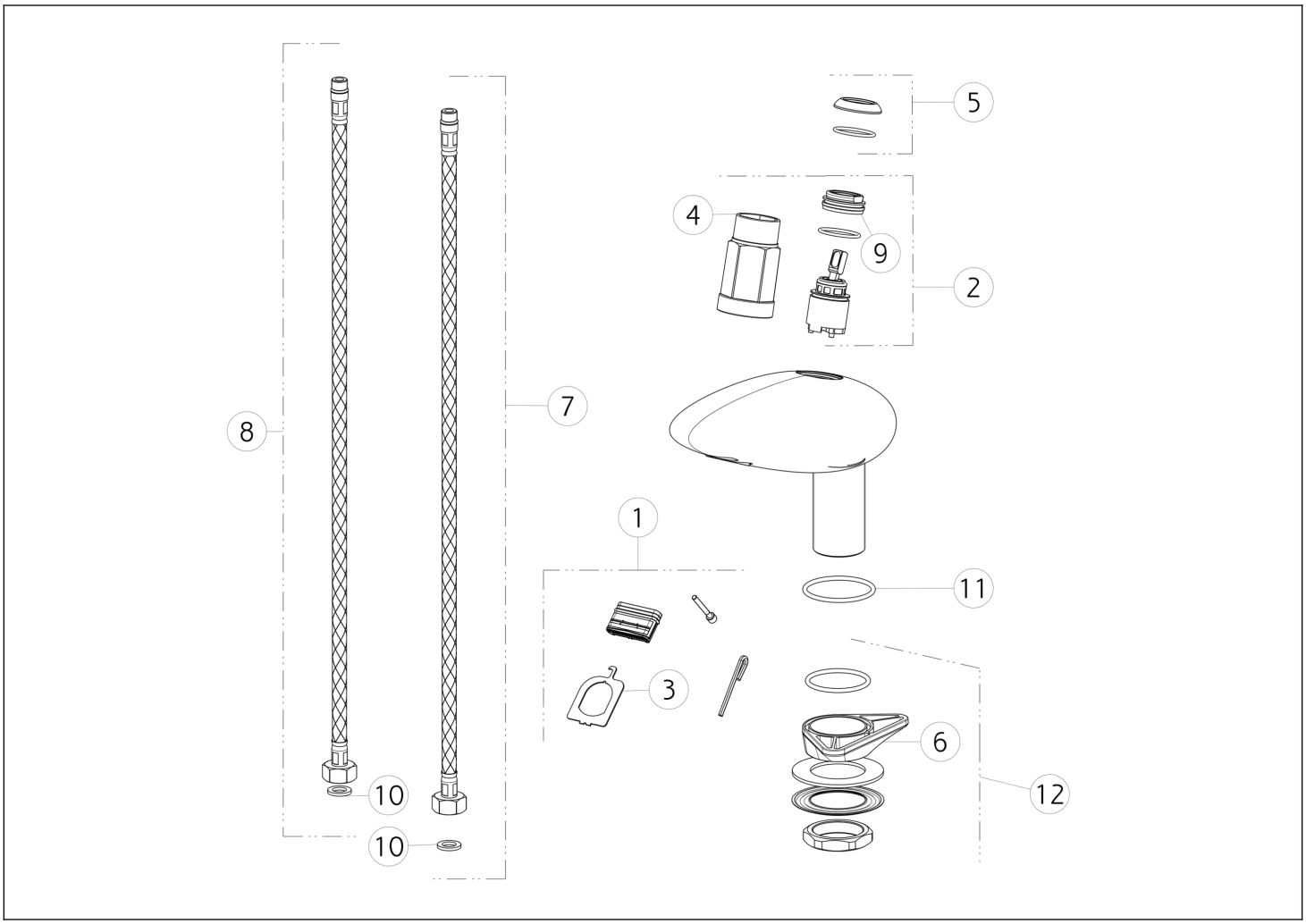

N°	Code	Description
1	SP00867	AERATOR
2	SP01233	CARTRIDGE
3	SP00828	SPECIAL TOOL
4	SP01820	SPECIAL TOOL
5	SP00484	FINISHING RING NUT
6	SP00329	TRIANGULAR FLANGE

N°	Code	Description
7	SP00868	BLU SUPPLY HOSE
8	SP00869	RED SUPPLY HOSE
9	SP01278	FIXING RING NUT
10	SP00064	GASKET
11	SP00703	GASKET
12	SP01250	FIXING SET

Gessi S.p.A. Parco Gessi, 13037 Serravalle Sesia (Vercelli) Italy Tel. +39 0163 454111 Fax. +39 0163 453150 - www.gessi.com - gessi@gessi.it This drawing, as required by law, may not be made public or reproduced without the written authorization of GESSI S.p.A. Copyright GESSI S.p.A.