GESSI

53001

GPF53001110000G000

RETTANGOLO

validity date
≥ 05/2021



Basin mixer, flexible connections, with waste

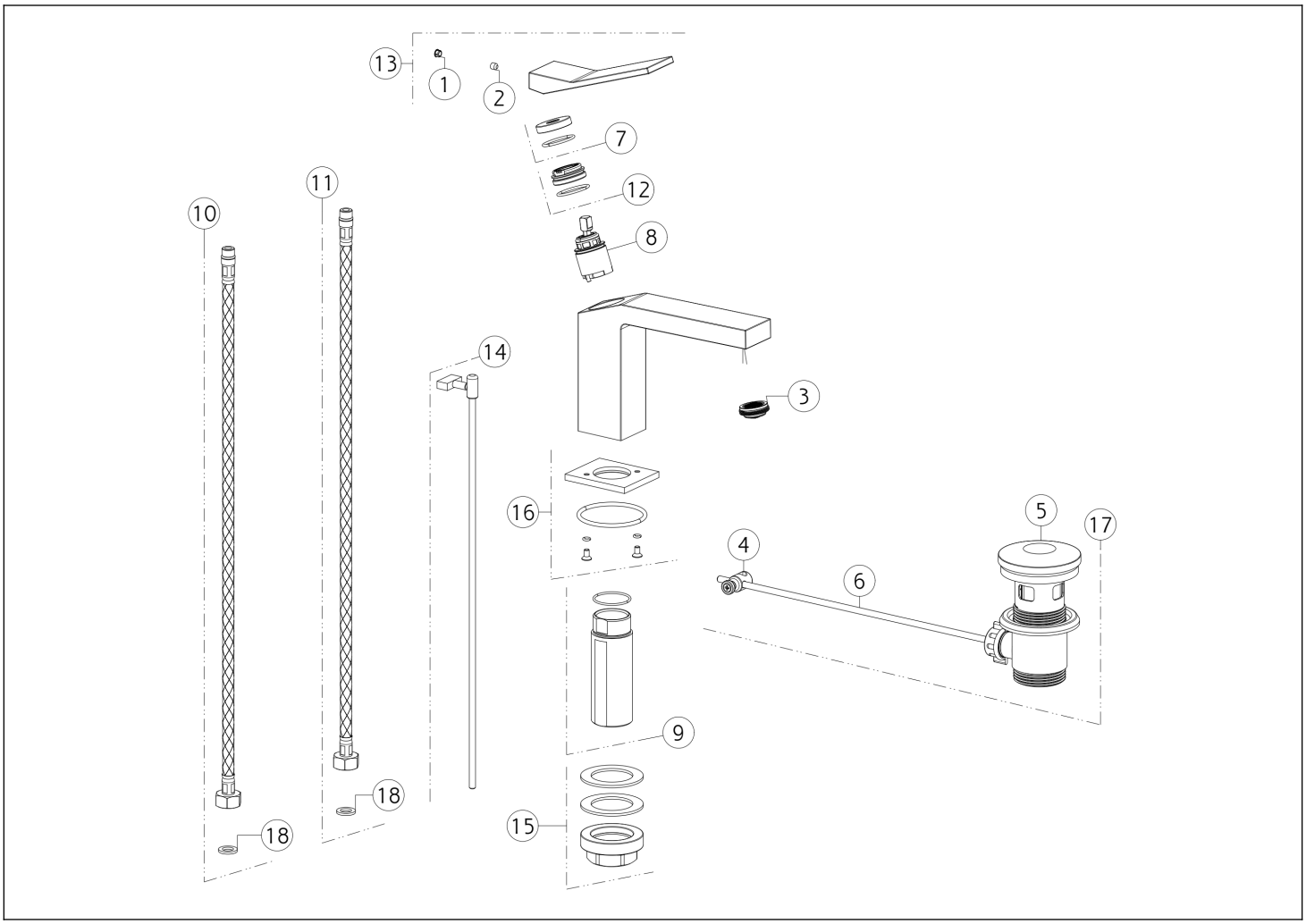

N°	Code	Description
1	SP00002	SCREW COVER
2	SP00610	SCREW
3	SP00923	COMPLETE AERATOR
4	SP00219	JOINT
5	SP00772	PLUG
6	SP00218	ROD
7	SP00697	FINISHING RING NUT
8	SP01277	CARTRIDGE
9	SP02372	SHANK

N°	Code	Description
10	SP00869	RED SUPPLY HOSE
11	SP00868	BLU SUPPLY HOSE
12	SP01278	FIXING RING NUT
13	SP01248	HANDLE
14	SP03588	PULL ROD
15	SP02370	FIXING SET
16	SP03586	BASE
17	PF29263	BASIN WASTE
18	SP00064	GASKET

Gessi S.p.A. Parco Gessi, 13037 Serravalle Sesia (Vercelli) Italy Tel. +39 0163 454111 Fax. +39 0163 453150 - www.gessi.com - gessi@gessi.it This drawing, as required by law, may not be made public or reproduced without the written authorization of GESSI S.p.A. Copyright GESSI S.p.A.