GESSI

53002

GPF5300210000G000

RETTANGOLO

validity date
≥ 10/2020



Basin mixer, flexible connections, without waste

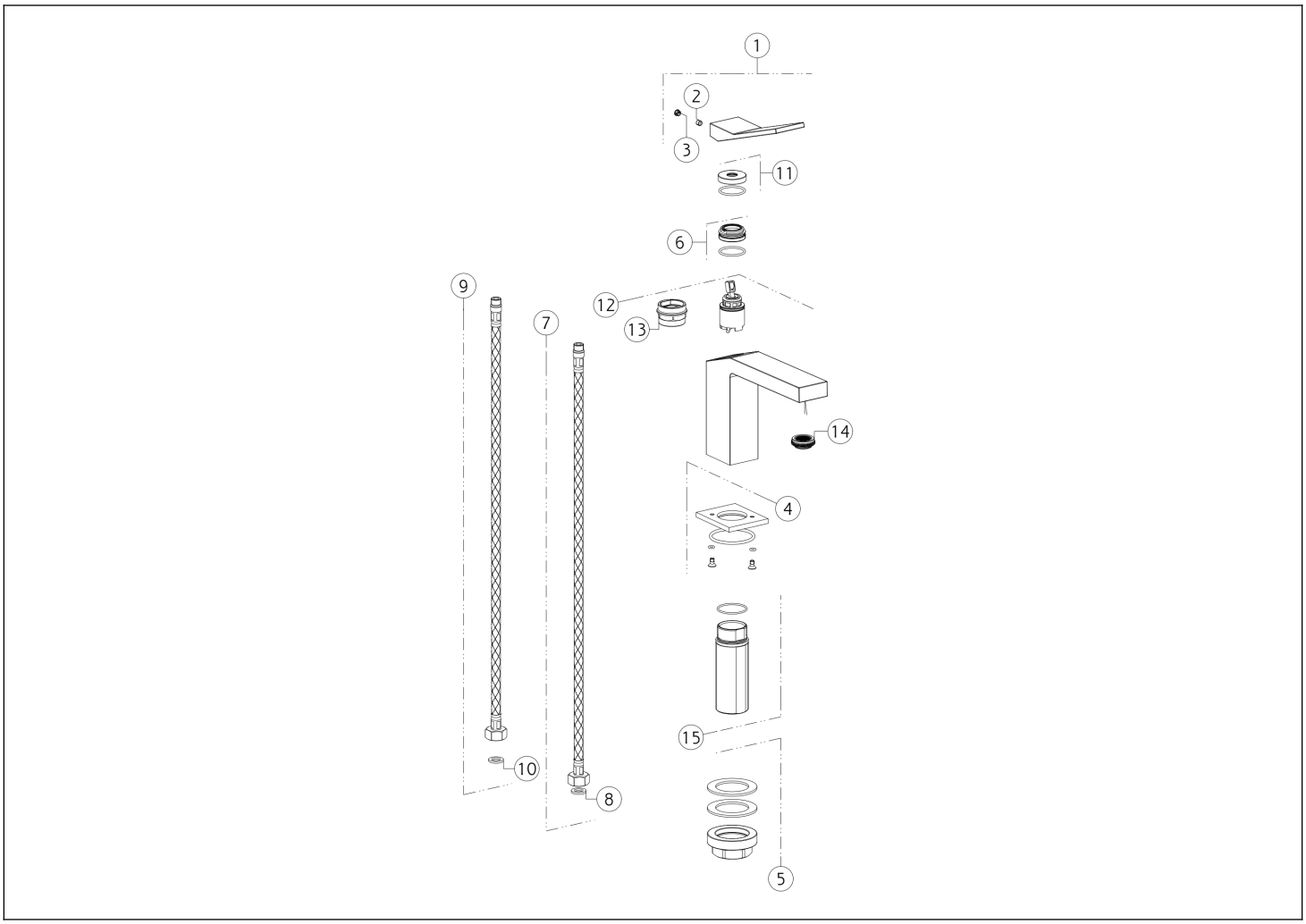

N°	Code	Description
1	SP01248	HANDLE
2	SP00610	SCREW
3	SP00002	SCREW COVER
4	SP03586	BASE
5	SP02370	FIXING SET
6	SP01278	FIXING RING NUT
7	SP00869	RED SUPPLY HOSE
8	SP00064	GASKET

N°	Code	Description
9	SP00868	BLU SUPPLY HOSE
10	SP00064	GASKET
11	SP00697	FINISHING RING NUT
12	SP01277	CARTRIDGE
13	SP00216	SPECIAL TOOL
14	SP00923	COMPLETE AERATOR
15	SP02372	SHANK

Gessi S.p.A. Parco Gessi, 13037 Serravalle Sesia (Vercelli) Italy Tel. +39 0163 454111 Fax. +39 0163 453150 - www.gessi.com - gessi@gessi.it This drawing, as required by law, may not be made public or reproduced without the written authorization of GESSI S.p.A. Copyright GESSI S.p.A.