GESSI

53004

GPF5300410000G000

RETTANGOLO

validity date
≥ 06/2017



High version basin mixer without waste

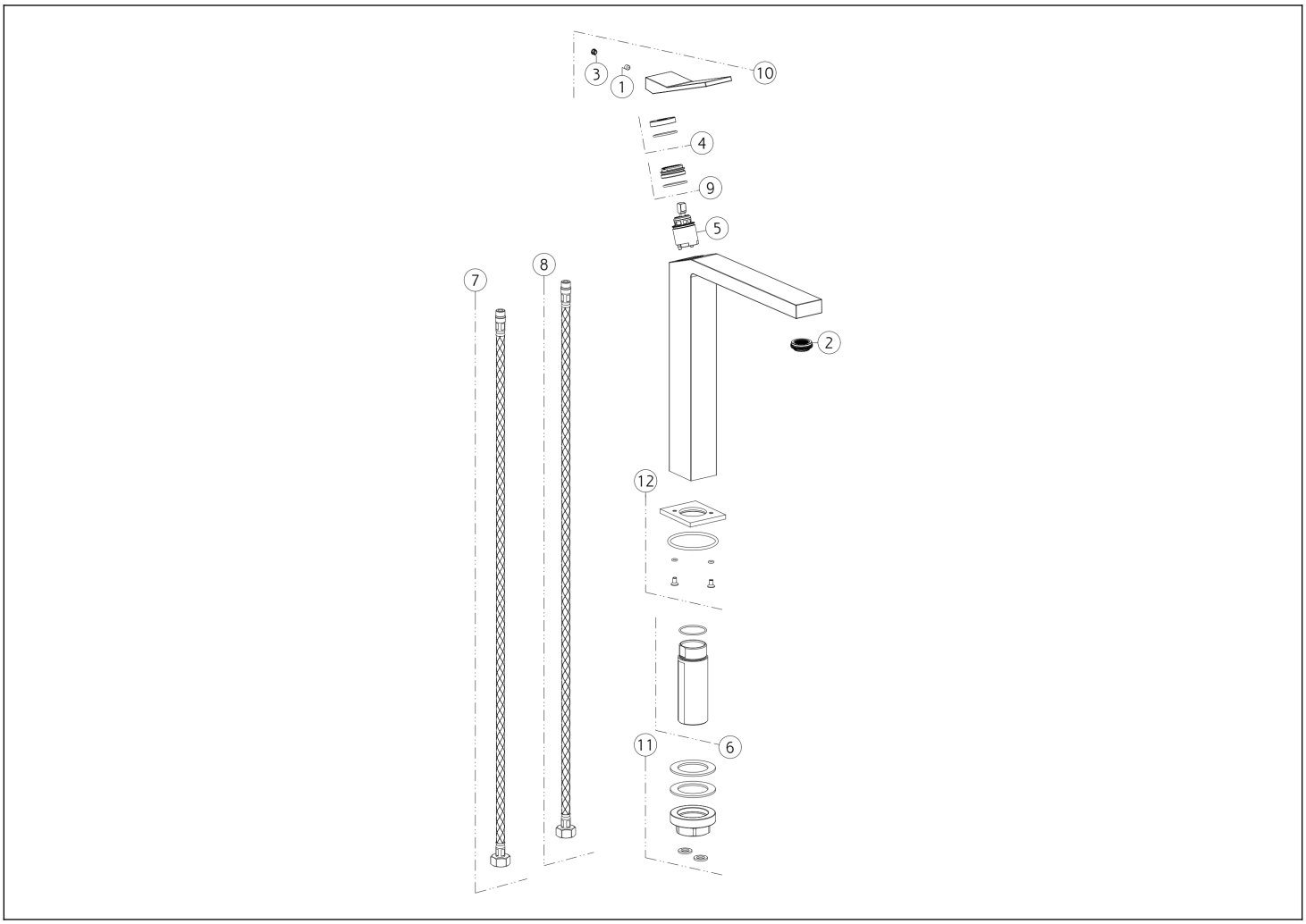

N°	Code	Description
1	SP00610	SCREW
2	SP00923	COMPLETE AERATOR
3	SP00002	SCREW COVER
4	SP00697	FINISHING RING NUT
5	SP01277	CARTRIDGE
6	SP02372	SHANK

N°	Code	Description
7	SP02593	RED SUPPLY HOSE
8	SP02592	BLU SUPPLY HOSE
9	SP01278	FIXING RING NUT
10	SP01248	HANDLE
11	SP02370	FIXING SET
12	SP03586	BASE

Gessi S.p.A. Parco Gessi, 13037 Serravalle Sesia (Vercelli) Italy Tel. +39 0163 454111 Fax. +39 0163 453150 - www.gessi.com - gessi@gessi.it This drawing, as required by law, may not be made public or reproduced without the written authorization of GESSI S.p.A. Copyright GESSI S.p.A.