GESSI

53007

GPF53007100000G000

RETTANGOLO

validity date
≥ 11/2020



Bidet mixer with flexible connections

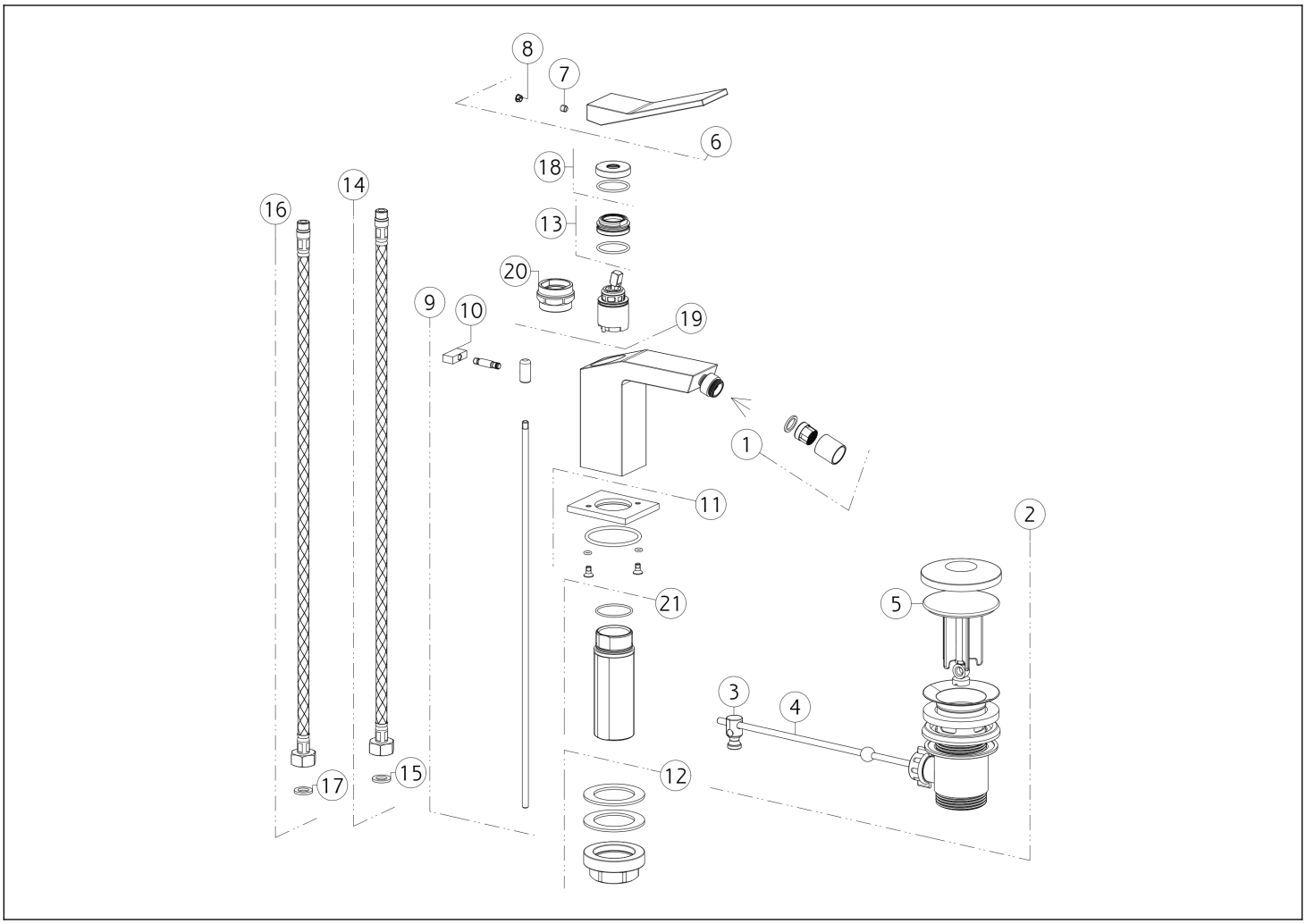

N°	Code	Description
1	SP02280	AERATOR
2	PF29264	BASIN WASTE
3	SP00219	JOINT
4	SP00220	ROD
5	SP00772	PLUG
6	SP01248	HANDLE
7	SP00610	SCREW
8	SP00002	SCREW COVER
9	SP03588	PULL ROD
10	SP00877	KNOB
11	SP03586	BASE

N°	Code	Description
12	SP02370	FIXING SET
13	SP01278	FIXING RING NUT
14	SP00869	RED SUPPLY HOSE
15	SP00064	GASKET
16	SP00868	BLU SUPPLY HOSE
17	SP00064	GASKET
18	SP00697	FINISHING RING NUT
19	SP01277	CARTRIDGE
20	SP00216	SPECIAL TOOL
21	SP02372	SHANK

Gessi S.p.A. Parco Gessi, 13037 Serravalle Sesia (Vercelli) Italy Tel. +39 0163 454111 Fax. +39 0163 453150 - www.gessi.com - gessi@gessi.it This drawing, as required by law, may not be made public or reproduced without the written authorization of GESSI S.p.A. Copyright GESSI S.p.A.