GESSI

53109

GPF5310900000G000

RETTANGOLO

validity date
≥ 09/2017



External parts mixer one-way diverter

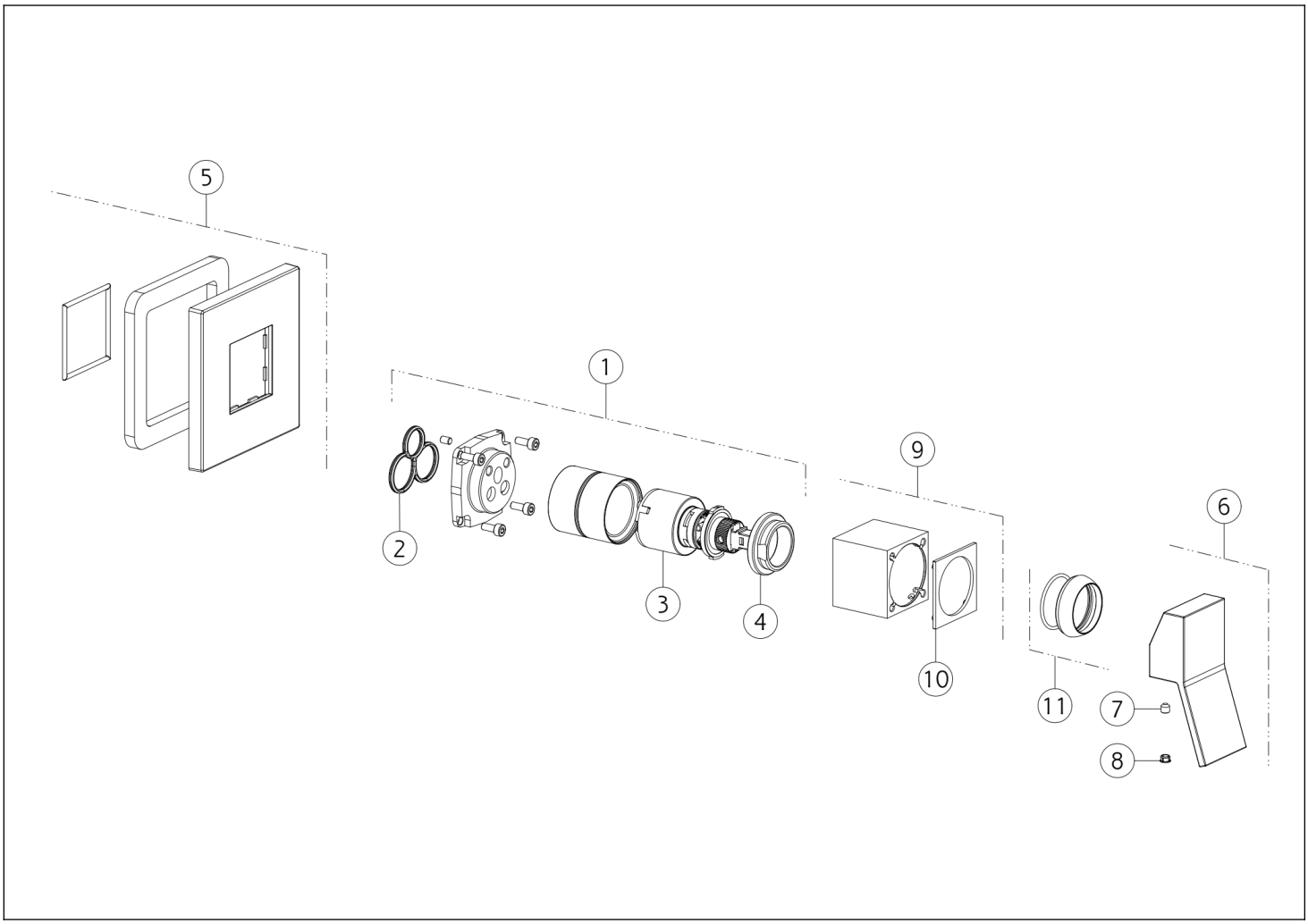

N°	Code	Description
1	SP01040	CARTRIDGE GROUP
2	SP00506	GASKET
3	SP00013	CARTRIDGE
4	SP00023	FIXING RING NUT
5	SP01247	FINISHING PLATE
6	SP01245	HANDLE

N°	Code	Description
7	SP00610	SCREW
8	SP00002	SCREW COVER
9	SP01041	FINISHING BUSHING
10	SP01037	INDICATOR RING
11	SP00565	FINISHING RING NUT

Gessi S.p.A. Parco Gessi, 13037 Serravalle Sesia (Vercelli) Italy Tel. +39 0163 454111 Fax. +39 0163 453150 - www.gessi.com - gessi@gessi.it This drawing, as required by law, may not be made public or reproduced without the written authorization of GESSI S.p.A. Copyright GESSI S.p.A.