GESSI

53140

GPF5314000000G000

RETTANGOLO

validity date
≥ 07/2017

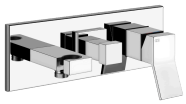

External parts for two-way built-in shower mixer with automatic diverter, water outlet, handshower hook. To be completed with flexible hose and handshower

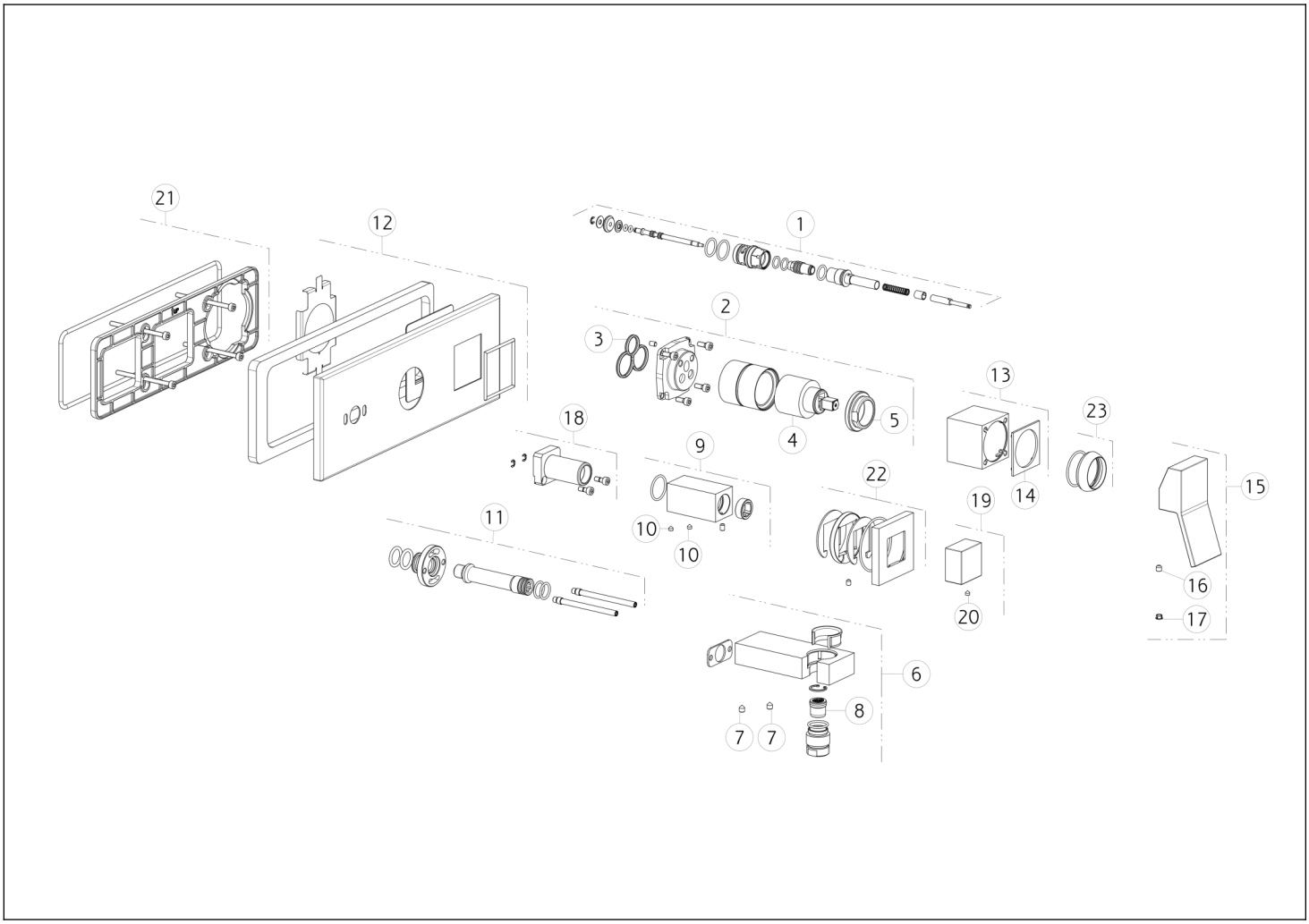

N°	Code	Description
1	SP00191	PUSH DIVERTER
2	SP01040	CARTRIDGE GROUP
3	SP00506	GASKET
4	SP00013	CARTRIDGE
5	SP00023	FIXING RING NUT
6	SP01199	CONNECTION WATER OUTLET WITH FIXED HOOK
7	SP00018	SCREW
8	SP01198	NON RETURN VALVE
9	SP01193	BUSH
10	SP01188	SCREW
11	SP01197	NIPPLE
12	SP01192	FINISHING PLATE

N°	Code	Description
13	SP01041	FINISHING BUSHING
14	SP01037	INDICATOR RING
15	SP01245	HANDLE
16	SP00610	SCREW
17	SP00002	SCREW COVER
18	SP00581	BUSH
19	SP01194	KNOB
20	SP01188	SCREW
21	SP00537	SUB PLATE
22	SP01195	COVER
23	SP00565	FINISHING RING NUT

Gessi S.p.A. Parco Gessi, 13037 Serravalle Sesia (Vercelli) Italy Tel. +39 0163 454111 Fax. +39 0163 453150 - www.gessi.com - gessi@gessi.it This drawing, as required by law, may not be made public or reproduced without the written authorization of GESSI S.p.A. Copyright GESSI S.p.A.