GESSI

54044

GPF5404400000G000

GESSI 316

validity date
≥ 12/2017



Sliding rail with antilimestone handshower, 1,50 m flexible hose

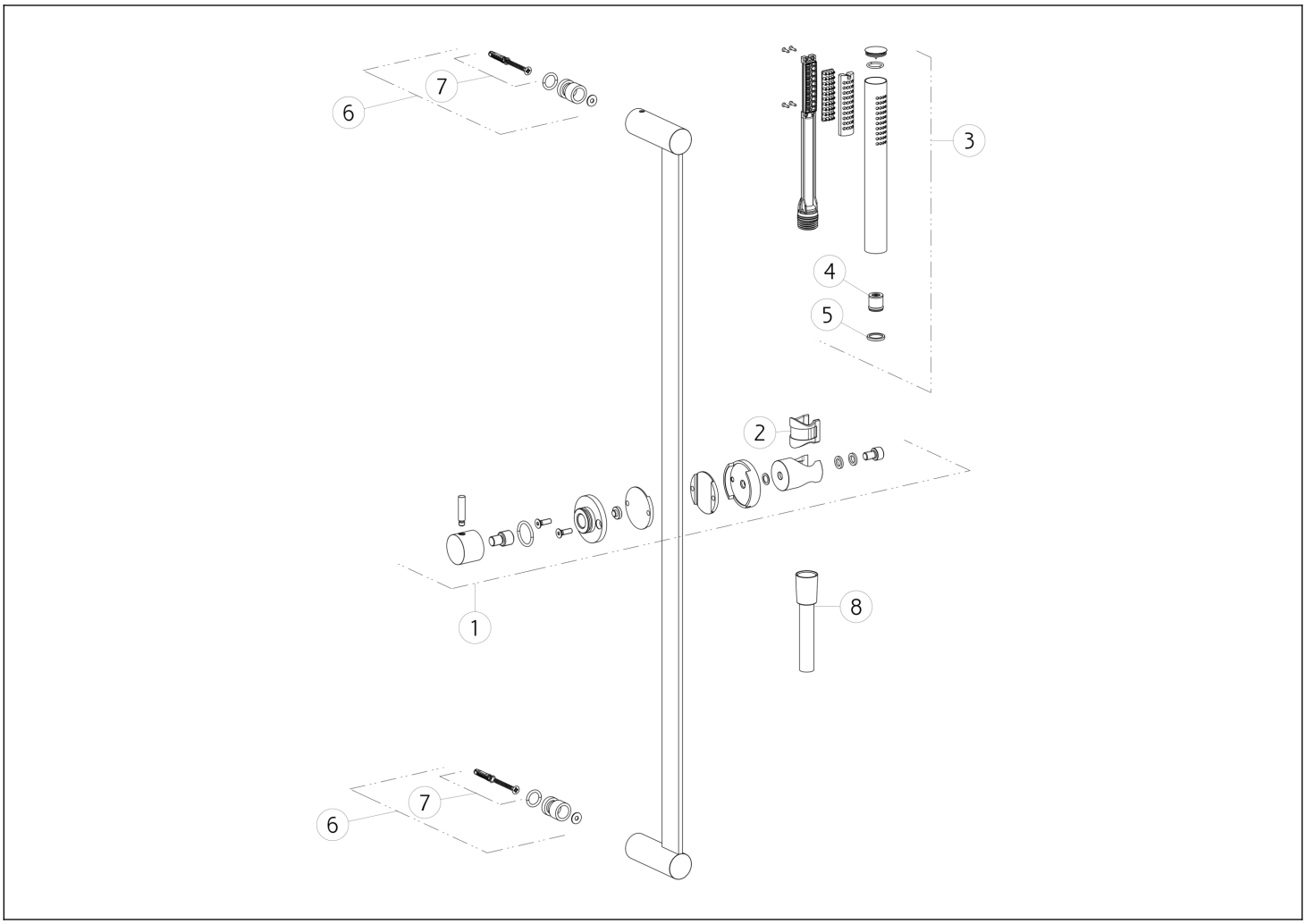

N°	Code	Description
1	SP01761	SLIDING SUPPORT
2	SP01777	BUSH
3	PF54054	HANDSHOWER
4	SP01634	FLOW REGOLATOR

N°	Code	Description
5	SP00243	GASKET
6	SP01760	FIXING SET
7	SP01775	FIXING SET
8	PF54137	HOSE

Gessi S.p.A. Parco Gessi, 13037 Serravalle Sesia (Vercelli) Italy Tel. +39 0163 454111 Fax. +39 0163 453150 - www.gessi.com - gessi@gessi.it This drawing, as required by law, may not be made public or reproduced without the written authorization of GESSI S.p.A. Copyright GESSI S.p.A.