GESSI

# 54045

GPF5404500000G000

## GESSI 316

validity date
≥ 01/2018



Sliding rail with antilimestone handshower, 1,50 m flexible hose and water outlet

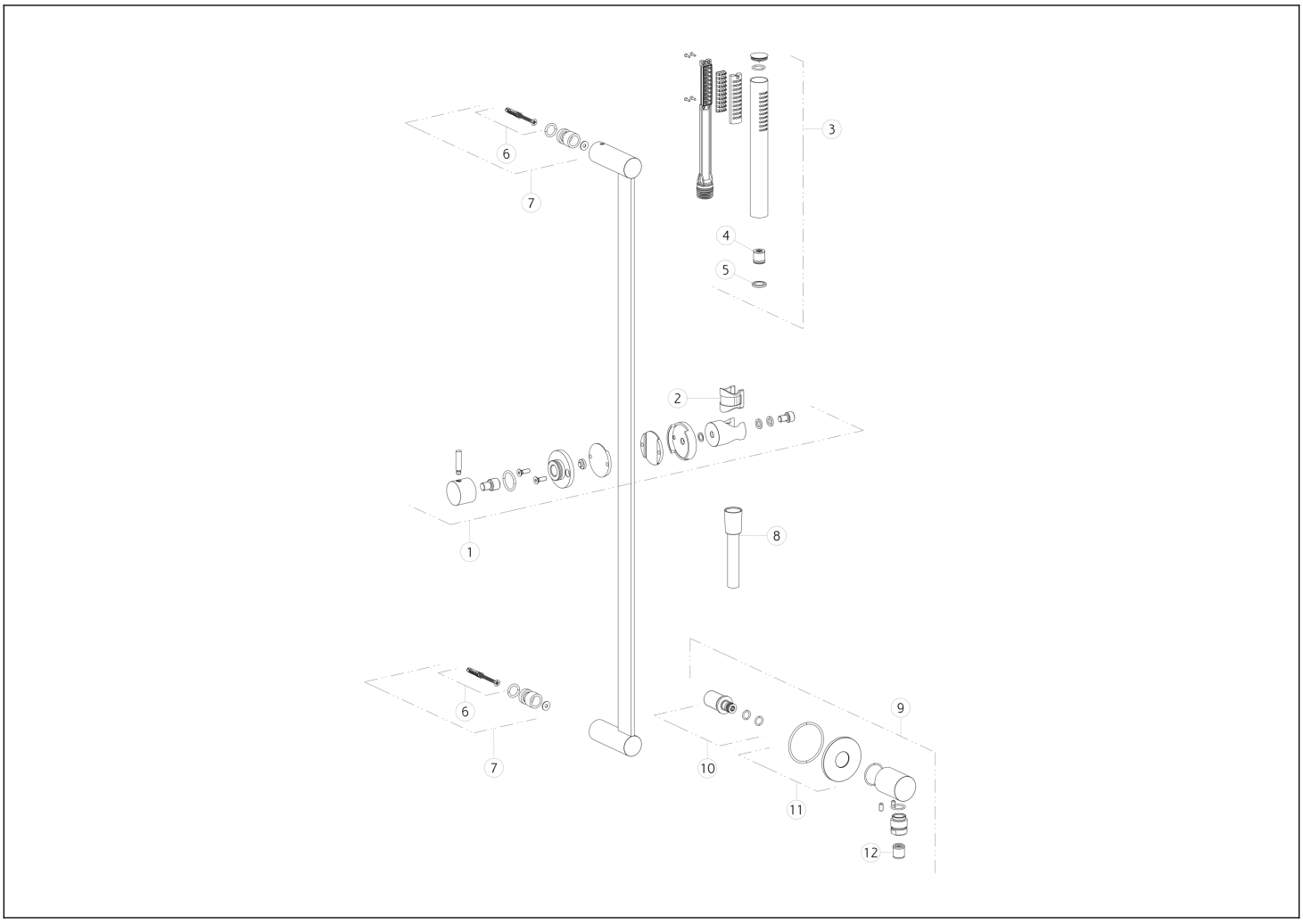


| N° | Code | Description |
|---|---|---|
| 1 | SP01761 | SLIDING SUPPORT |
| 2 | SP01777 | BUSH |
| 3 | PF54054 | HANDSHOWER |
| 4 | SP01634 | FLOW REGOLATOR |
| 5 | SP00243 | GASKET |
| 6 | SP01775 | FIXING SET |

| N° | Code | Description |
|---|---|---|
| 7 | SP01760 | FIXING SET |
| 8 | PF54137 | HOSE |
| 9 | PF54269 | CONNECTION WATER OUTLET |
| 10 | SP01816 | NIPPLE |
| 11 | SP01815 | COVER |
| 12 | SP00014 | NON RETURN VALVE |

Gessi S.p.A. Parco Gessi, 13037 Serravalle Sesia (Vercelli) Italy Tel. +39 0163 454111 Fax. +39 0163 453150 - www.gessi.com - gessi@gessi.it This drawing, as required by law, may not be made public or reproduced without the written authorization of GESSI S.p.A. Copyright GESSI S.p.A.