GESSI

54088

GPF5408800000G000

GESSI 316

validity date
≥ 12/2017



External parts for wall-mounted basin mixer, media spout, without waste

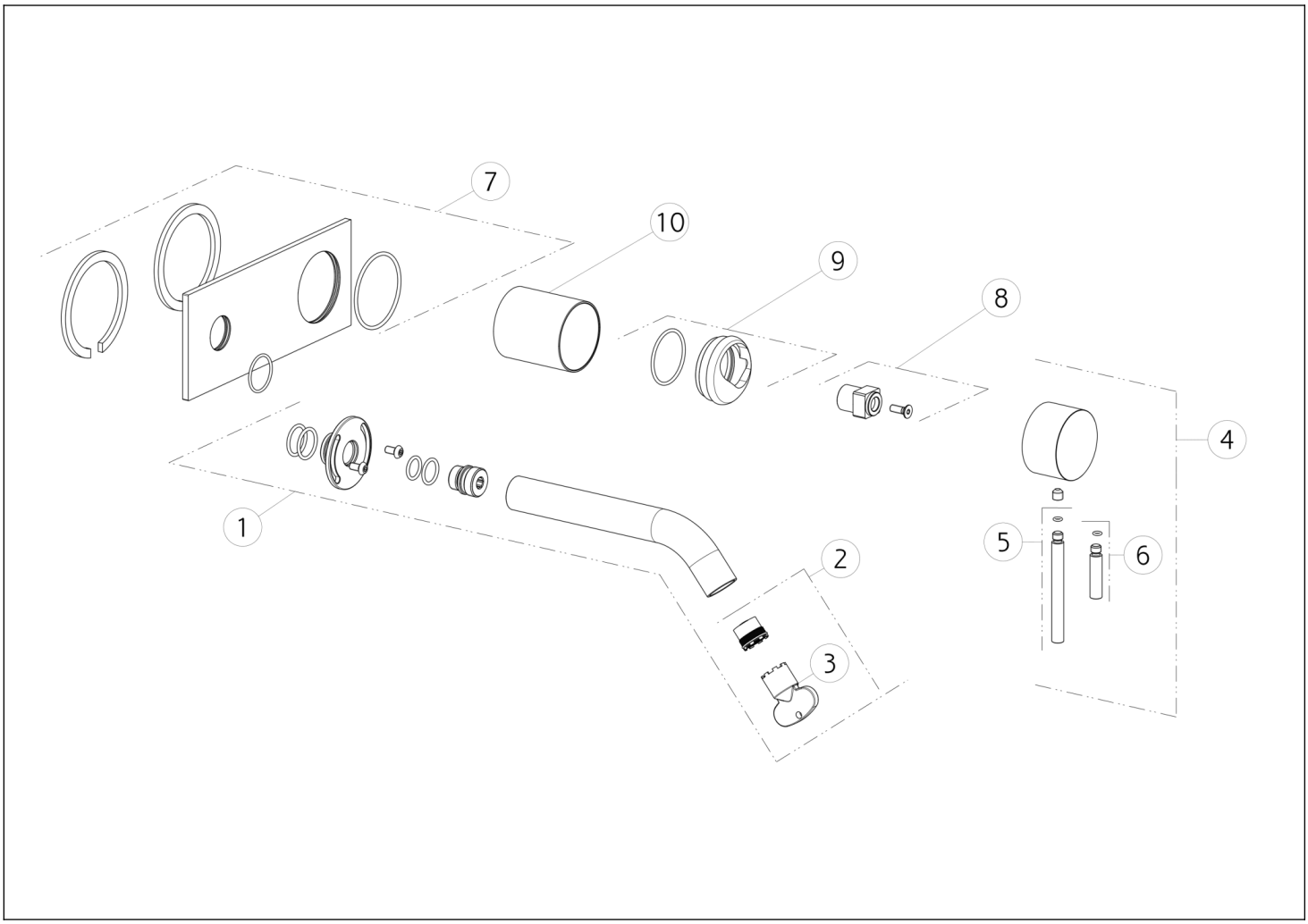

N°	Code	Description
1	SP01747	COMPLETE SPOUT
2	SP01608	AERATOR
3	SP00504	KEY
4	SP01746	HANDLE
5	SP01626	LEVER

N°	Code	Description
6	SP01625	LEVER
7	SP01650	FINISHING PLATE
8	SP01745	SPACER
9	SP01744	NUT
10	SP01743	FINISHED BUSH

 This drawing, as required by law, may not be made public or reproduced without the written authorization of GESSI S.p.A. Copyright GESSI S.p.A.