GESSI

54107

GPF5410700000G000

GESSI 316

validity date
≥ 11/2017



Bidet mixer, flexible connections, with waste

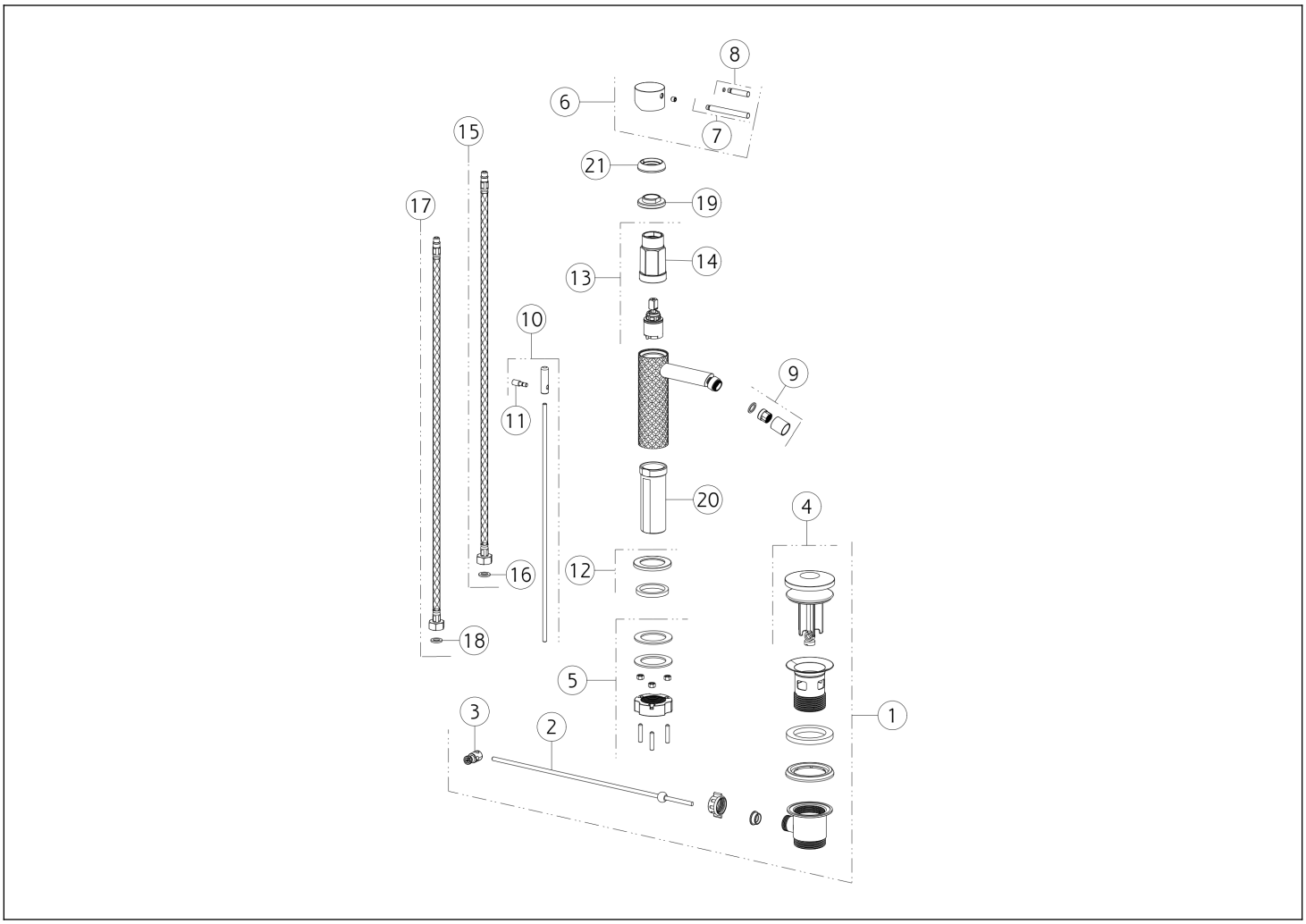

N°	Code	Description
1	SP01682	BASIN WASTE
2	SP00218	ROD
3	SP00219	JOINT
4	SP01709	WASTE COVER CAP
5	SP02370	FIXING KIT
6	SP01698	HANDLE
7	SP01626	LEVER
8	SP01625	LEVER
9	SP01712	COMPLETE AERATOR
10	SP01710	POP-UP WASTE ROD
11	SP01705	KNOB

N°	Code	Description
12	SP01702	BASE PLATE
13	SP01700	CARTRIDGE
14	SP01820	KEY
15	SP01591	BLUE SUPPLY HOSE
16	SP00064	GASKET
17	SP01590	RED SUPPLY HOSE
18	SP00064	GASKET
19	SP01704	FIXING RING NUT
20	SP01701	SHANK
21	SP01699	FINISHING RING NUT

Gessi S.p.A. Parco Gessi, 13037 Serravalle Sesia (Vercelli) Italy Tel. +39 0163 454111 Fax. +39 0163 453150 - www.gessi.com - gessi@gessi.it This drawing, as required by law, may not be made public or reproduced without the written authorization of GESSI S.p.A. Copyright GESSI S.p.A.