GESSI

54147

GPF5414700000G000

GESSI 316

validity date
≥ 06/2025



Ceiling-mounted adjustable headshower. Length on request.

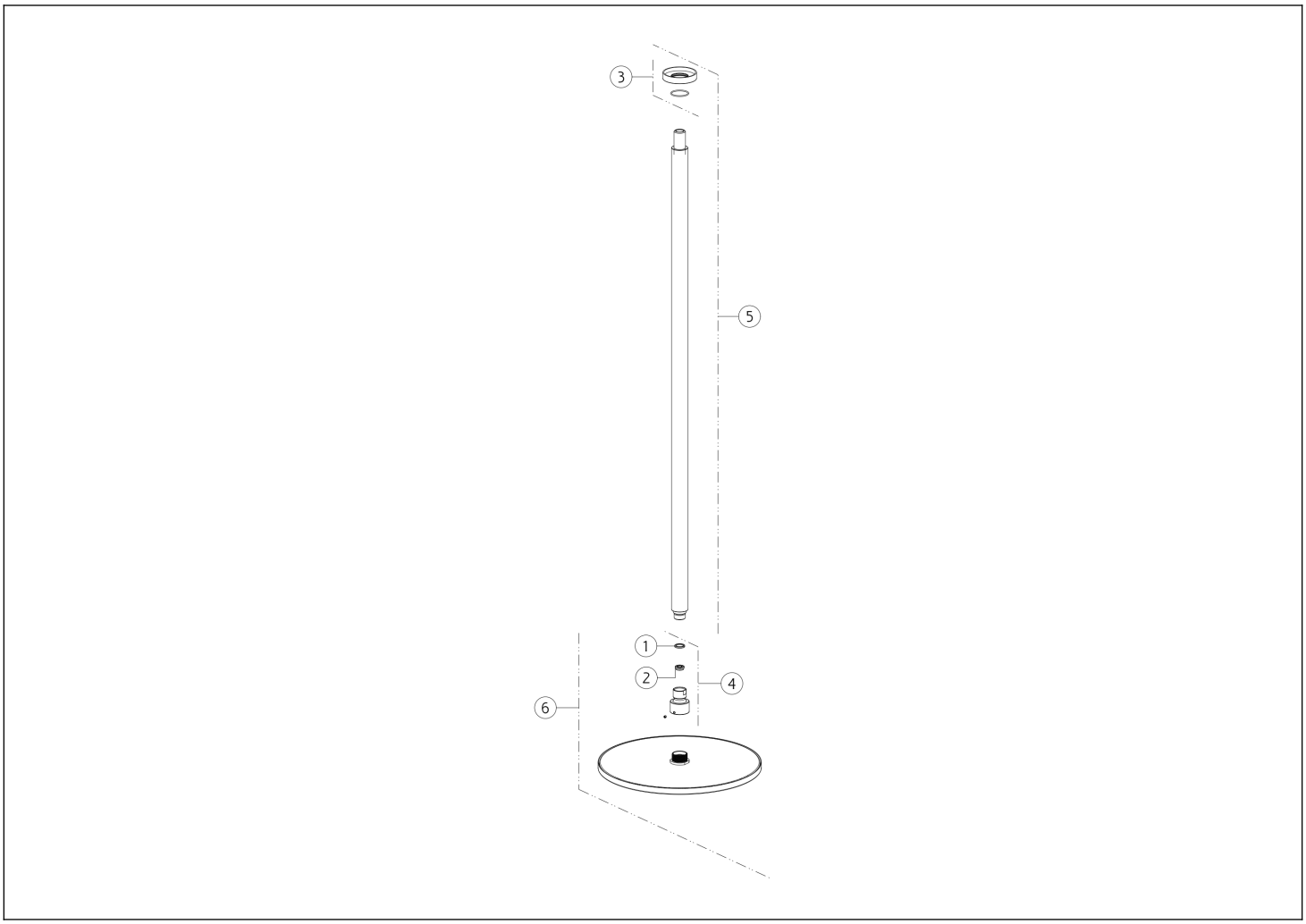

N°	Code	Description
1	SP04574	FILTER GASKET
2	SP02191	FLOW LIMITING VALVE
3	SP01749	ROSETTE

N°	Code	Description
4	SP03168	JOINT
5	SP04184	SHOWER ARM
6	SP05203	SHOWERHEAD

Gessi S.p.A. Parco Gessi, 13037 Serravalle Sesia (Vercelli) Italy Tel. +39 0163 454111 Fax. +39 0163 453150 - www.gessi.com - gessi@gessi.it This drawing, as required by law, may not be made public or reproduced without the written authorization of GESSI S.p.A. Copyright GESSI S.p.A.