GESSI

54150

GPF5415010000G000

GESSI 316

validity date
≥ 03/2023



Ceiling-mounted showerhead, length on request

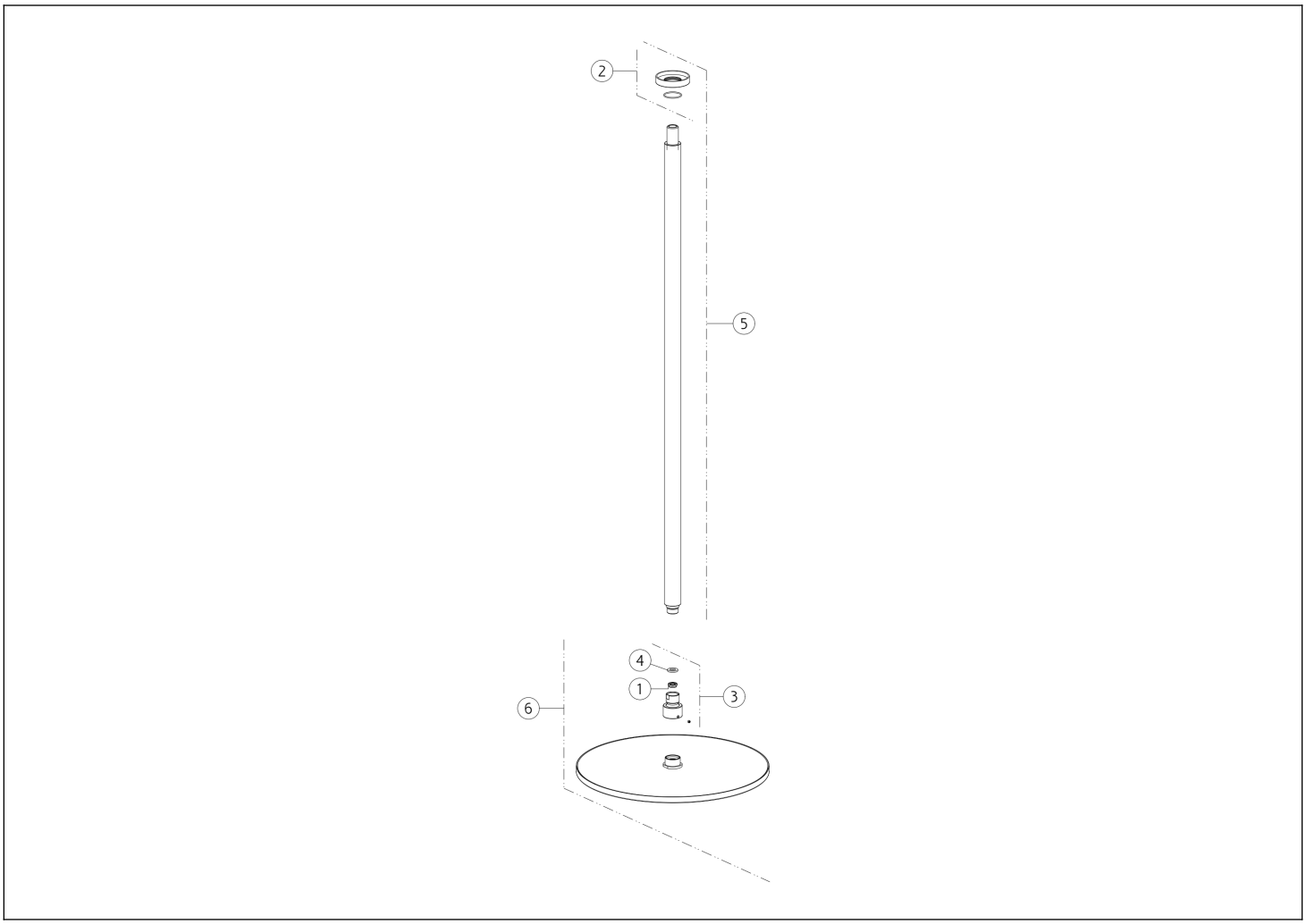

N°	Code	Description
1	SP02191	FLOW LIMITING VALVE
2	SP05583	ROSETTE
3	SP03168	JOINT

N°	Code	Description
4	SP04574	FILTER GASKET
5	SP02335	SHOWER ARM
6	SP04163	SHOWERHEAD

Gessi S.p.A. Parco Gessi, 13037 Serravalle Sesia (Vercelli) Italy Tel. +39 0163 454111 Fax. +39 0163 453150 - www.gessi.com - gessi@gessi.it This drawing, as required by law, may not be made public or reproduced without the written authorization of GESSI S.p.A. Copyright GESSI S.p.A.