GESSI

54152

GPF5415210000G000

GESSI 316

validity date
≥ 12/2022



Ceiling-mounted adjustable showerhead

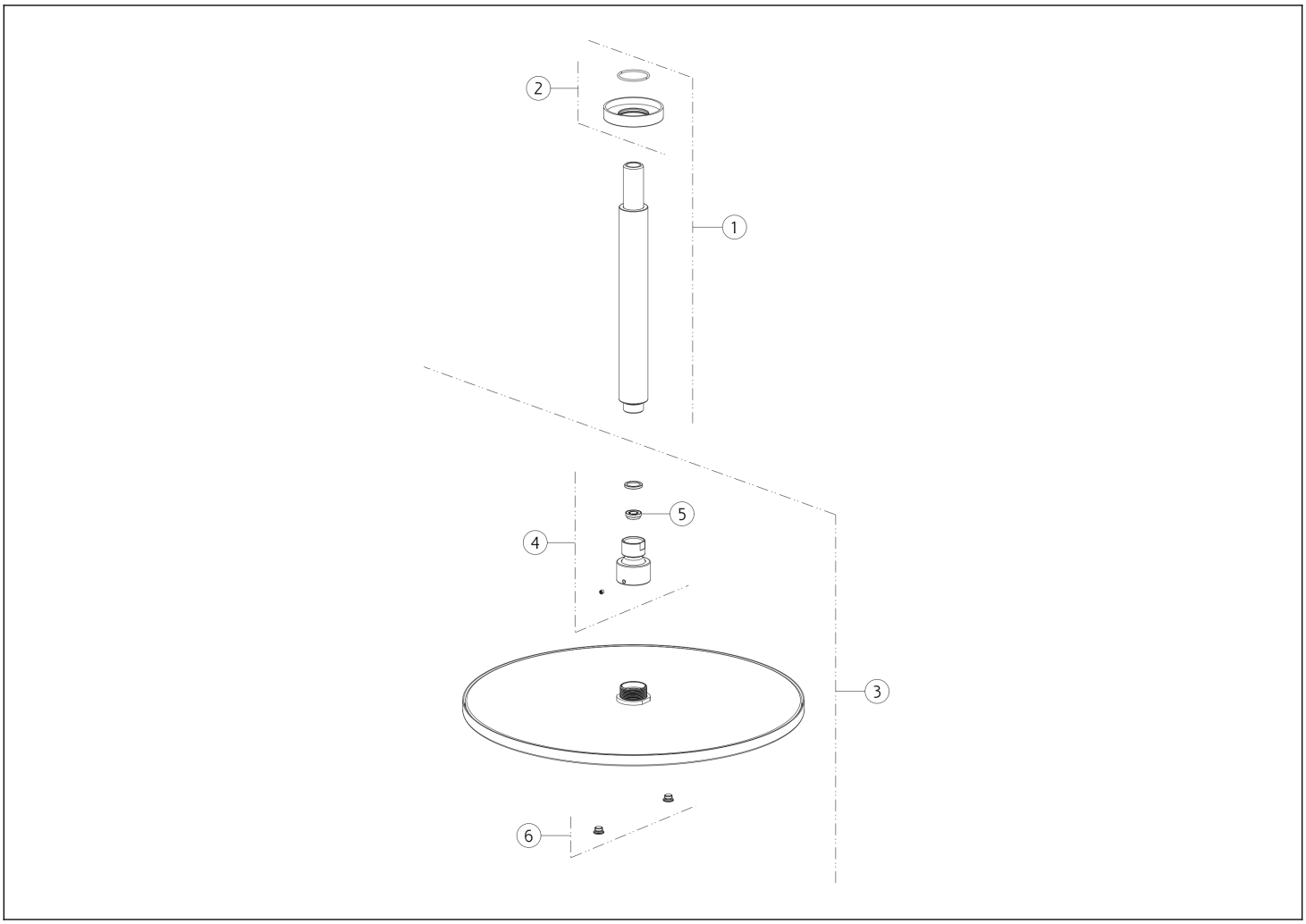

N°	Code	Description
1	SP01759	SHOWER ARM
2	SP01749	COVER
3	SP04163	SHOWERHEAD

N°	Code	Description
4	SP03168	JOINT
5	SP02191	FLOW REGOLATOR
6	SP03039	SCREW

Gessi S.p.A. Parco Gessi, 13037 Serravalle Sesia (Vercelli) Italy Tel. +39 0163 454111 Fax. +39 0163 453150 - www.gessi.com - gessi@gessi.it This drawing, as required by law, may not be made public or reproduced without the written authorization of GESSI S.p.A. Copyright GESSI S.p.A.