GESSI

54153

GPF5415300000G000

validity date
≥ 06/2023



GESSI 316

Ceiling-mounted adjustable showerhead with custom length

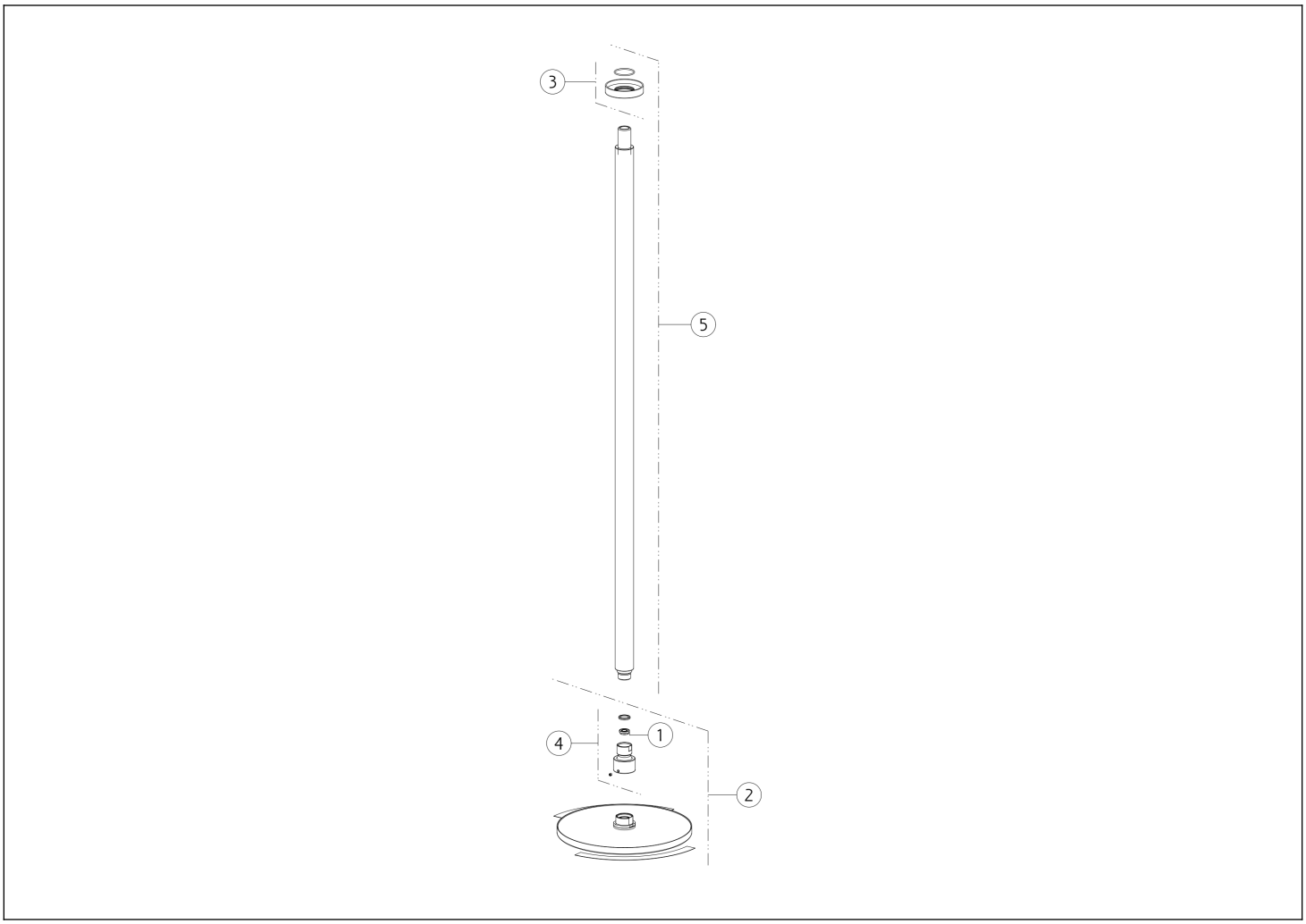

N°	Code	Description
1	SP02191	FLOW REGOLATOR
2	SP04162	COMPLETE SHOWERHEAD
3	SP01749	COVER

N°	Code	Description
4	SP03168	JOINT
5	SP04184	SHOWER ARM

Gessi S.p.A. Parco Gessi, 13037 Serravalle Sesia (Vercelli) Italy Tel. +39 0163 454111 Fax. +39 0163 453150 - www.gessi.com - gessi@gessi.it This drawing, as required by law, may not be made public or reproduced without the written authorization of GESSI S.p.A. Copyright GESSI S.p.A.