GESSI

54161

GPF5416110000G000

GESSI 316

validity date
≥ 02/2018



water outlet and handshower hook

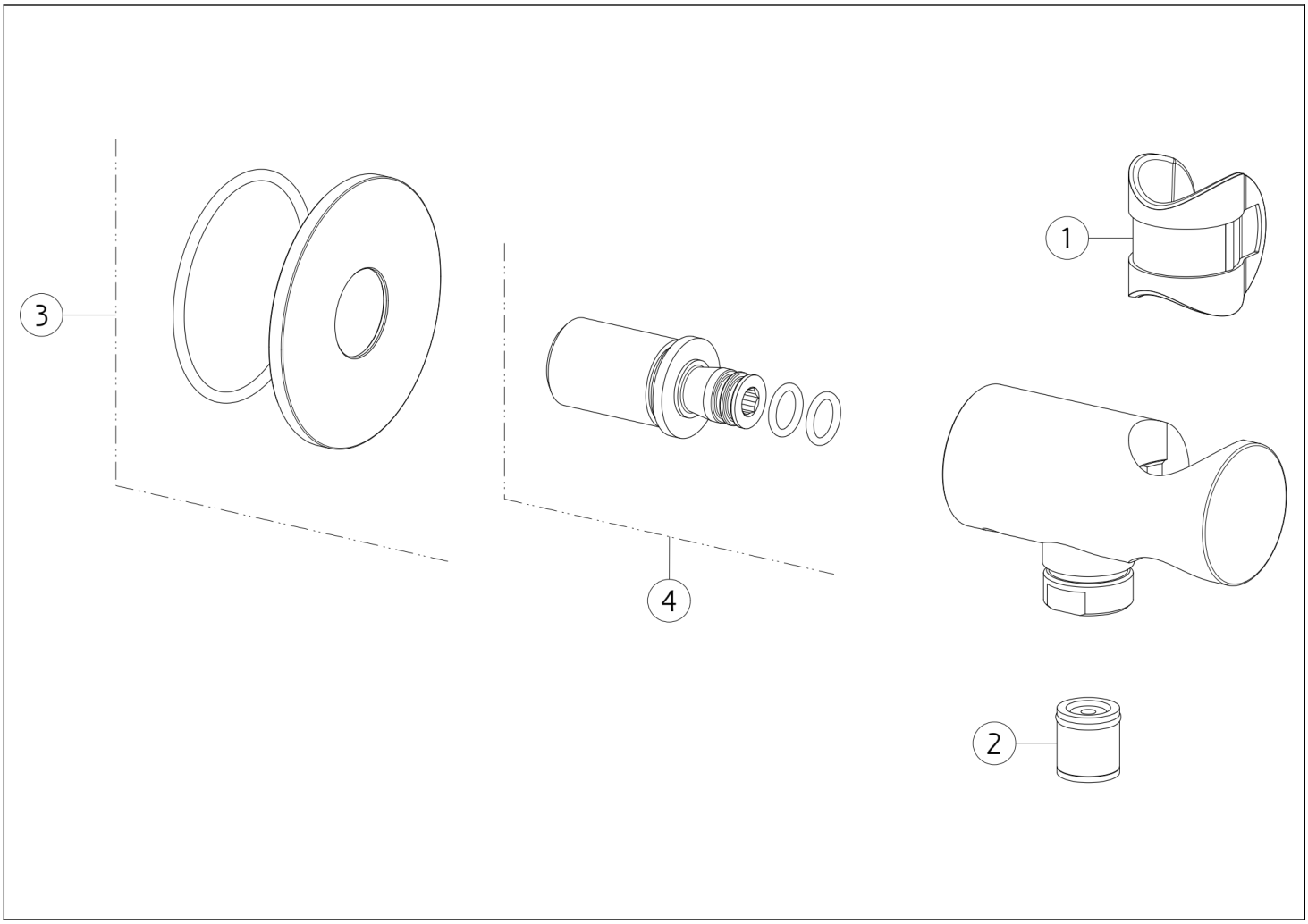

N°	Code	Description
1	SP01823	BUSH
2	SP00014	NON RETURN VALVE

N°	Code	Description
3	SP01815	COVER
4	SP01816	NIPPLE

Gessi S.p.A. Parco Gessi, 13037 Serravalle Sesia (Vercelli) Italy Tel. +39 0163 454111 Fax. +39 0163 453150 - www.gessi.com - gessi@gessi.it This drawing, as required by law, may not be made public or reproduced without the written authorization of GESSI S.p.A. Copyright GESSI S.p.A.