GESSI

# 54189

GPF5418900000G000

## GESSI 316

validity date
≥ 02/2018



External parts basin mixer, spout,length on request, without waste

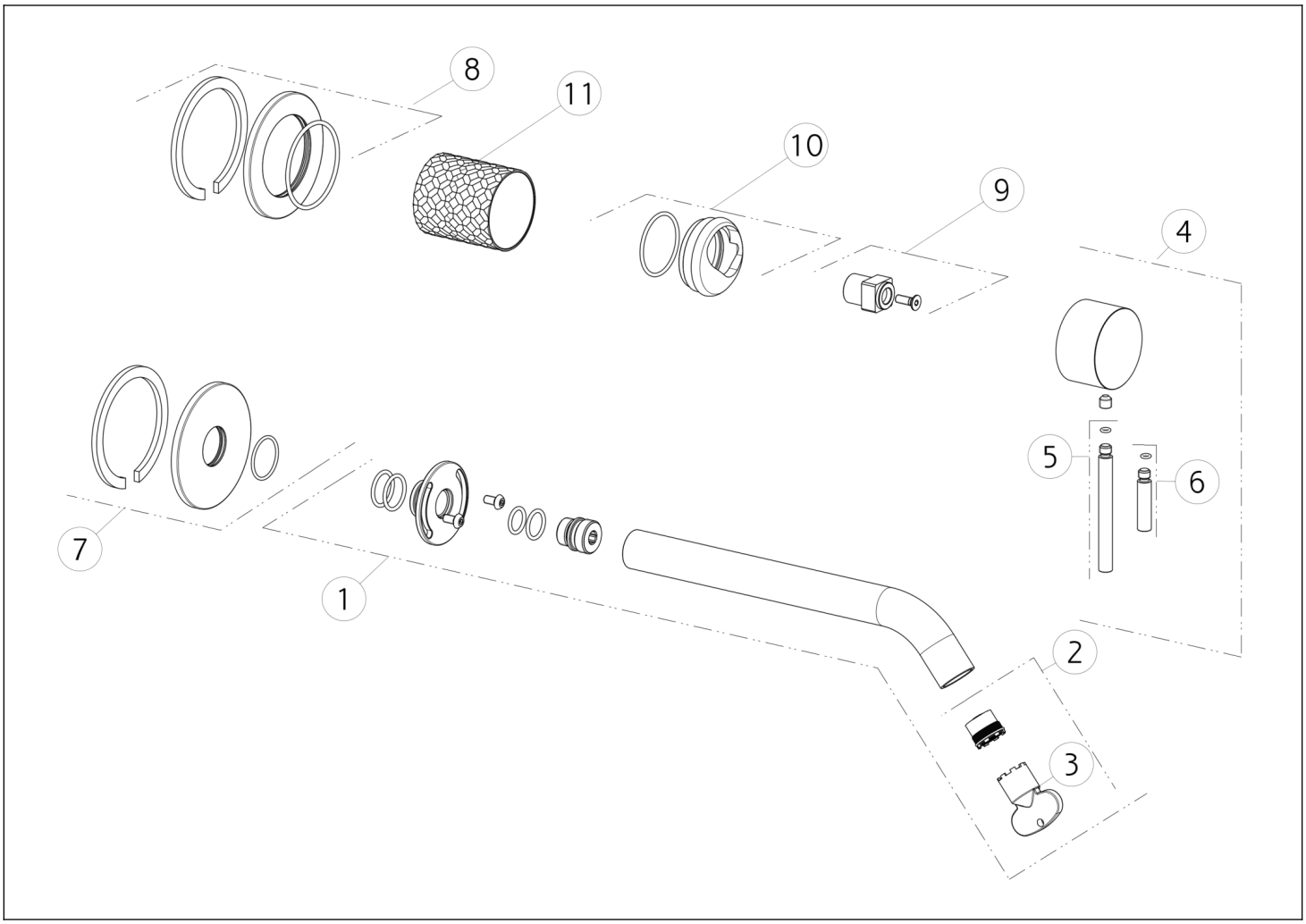


| N° | Code | Description |
|---|---|---|
| 1 | SP01757 | COMPLETE SPOUT |
| 2 | SP01608 | AERATOR |
| 3 | SP00504 | KEY |
| 4 | SP01746 | HANDLE |
| 5 | SP01626 | LEVER |
| 6 | SP01625 | LEVER |

| N° | Code | Description |
|---|---|---|
| 7 | SP01719 | ROSETTE |
| 8 | SP01665 | ROSETTE |
| 9 | SP01745 | SPACER |
| 10 | SP01744 | NUT |
| 11 | SP01748 | FINISHED BUSH |

Gessi S.p.A. Parco Gessi, 13037 Serravalle Sesia (Vercelli) Italy Tel. +39 0163 454111 Fax. +39 0163 453150 - www.gessi.com - gessi@gessi.it This drawing, as required by law, may not be made public or reproduced without the written authorization of GESSI S.p.A. Copyright GESSI S.p.A.