GESSI

54209

GPF5420900000G000

GESSI 316

validity date
≥ 11/2017



High version basin mixer , short spout, flexible connections, without waste

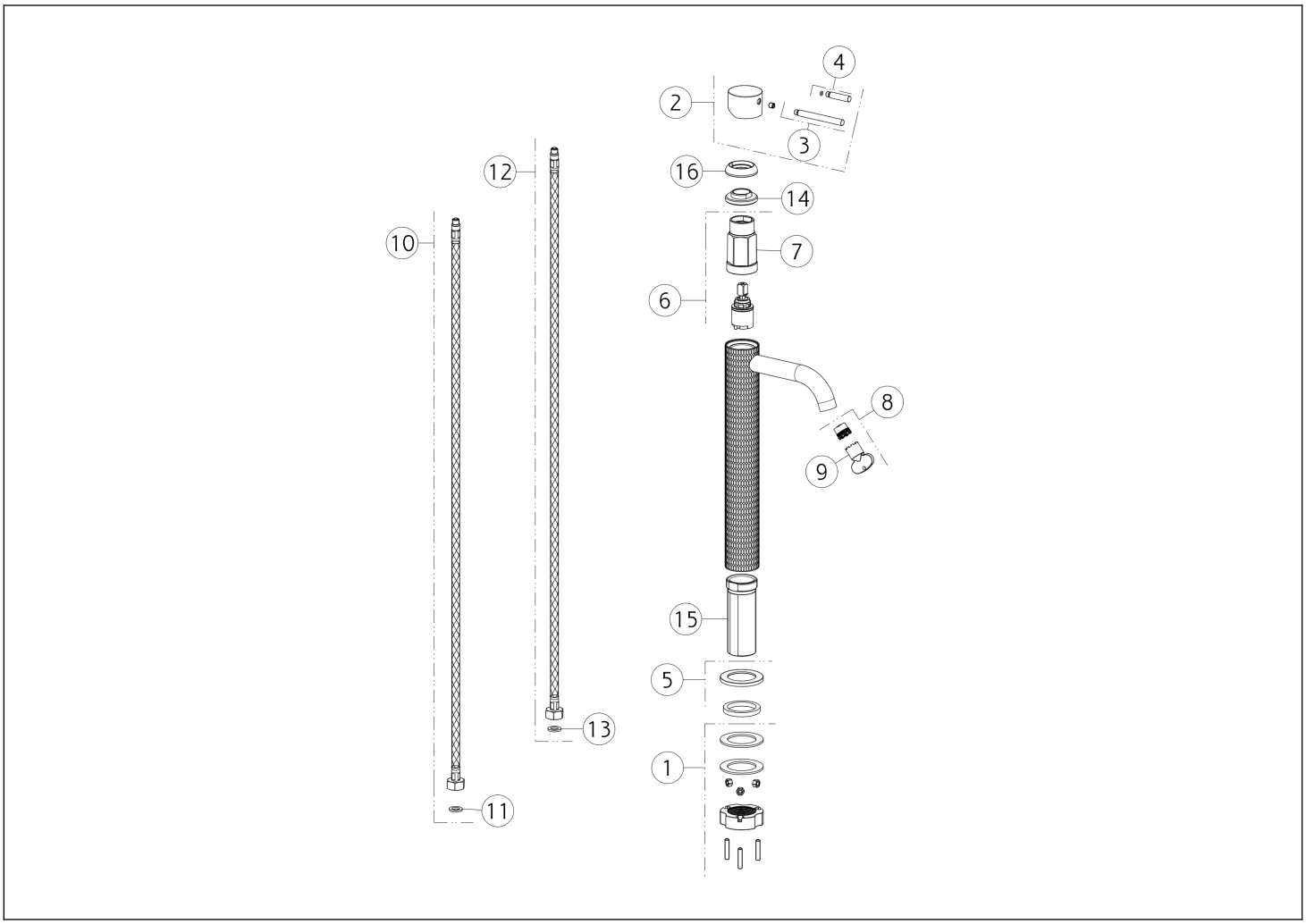

N°	Code	Description
1	SP02370	FIXING KIT
2	SP01698	HANDLE
3	SP01626	LEVER
4	SP01625	LEVER
5	SP01702	BASE PLATE
6	SP01700	CARTRIDGE
7	SP01820	KEY
8	SP01608	AERATOR

N°	Code	Description
9	SP00504	KEY
10	SP01287	RED SUPPLY HOSE
11	SP00064	GASKET
12	SP01286	BLUE SUPPLY HOSE
13	SP00064	GASKET
14	SP01704	FIXING RING NUT
15	SP01701	SHANK
16	SP01699	FINISHING RING NUT

Gessi S.p.A. Parco Gessi, 13037 Serravalle Sesia (Vercelli) Italy Tel. +39 0163 454111 Fax. +39 0163 453150 - www.gessi.com - gessi@gessi.it This drawing, as required by law, may not be made public or reproduced without the written authorization of GESSI S.p.A. Copyright GESSI S.p.A.