GESSI

54303

GPF5430300000G000

GESSI 316

validity date
≥ 11/2017



High version basin mixer , long spout, flexible connections, with waste

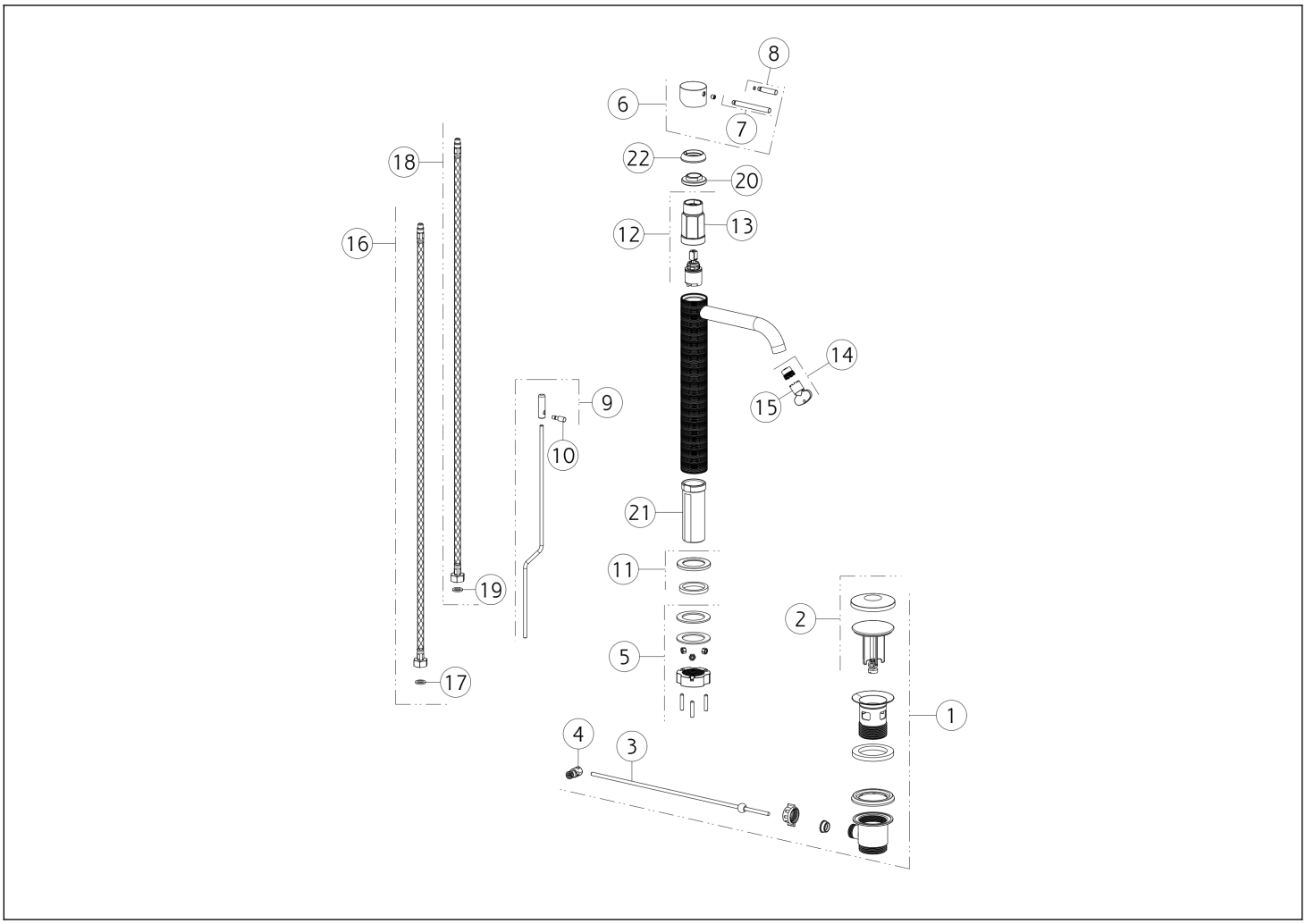

N°	Code	Description
1	SP01682	BASIN WASTE
2	SP01709	WASTE COVER CAP
3	SP00218	ROD
4	SP00219	JOINT
5	SP02370	FIXING KIT
6	SP01698	HANDLE
7	SP01626	LEVER
8	SP01625	LEVER
9	SP01706	POP-UP WASTE ROD
10	SP01705	KNOB
11	SP01702	BASE PLATE

N°	Code	Description
12	SP01700	CARTRIDGE
13	SP01820	KEY
14	SP01608	AERATOR
15	SP00504	KEY
16	SP01287	RED SUPPLY HOSE
17	SP00064	GASKET
18	SP01286	BLUE SUPPLY HOSE
19	SP00064	GASKET
20	SP01704	FIXING RING NUT
21	SP01701	SHANK
22	SP01699	FINISHING RING NUT

Gessi S.p.A. Parco Gessi, 13037 Serravalle Sesia (Vercelli) Italy Tel. +39 0163 454111 Fax. +39 0163 453150 - www.gessi.com - gessi@gessi.it This drawing, as required by law, may not be made public or reproduced without the written authorization of GESSI S.p.A. Copyright GESSI S.p.A.