GESSI

54334

GPF5433400000G000

GESSI 316

validity date
≥ 04/2023

External parts for wall-mounted thermostatic mixer. Vertical/horizontal setting up with two separate exits.

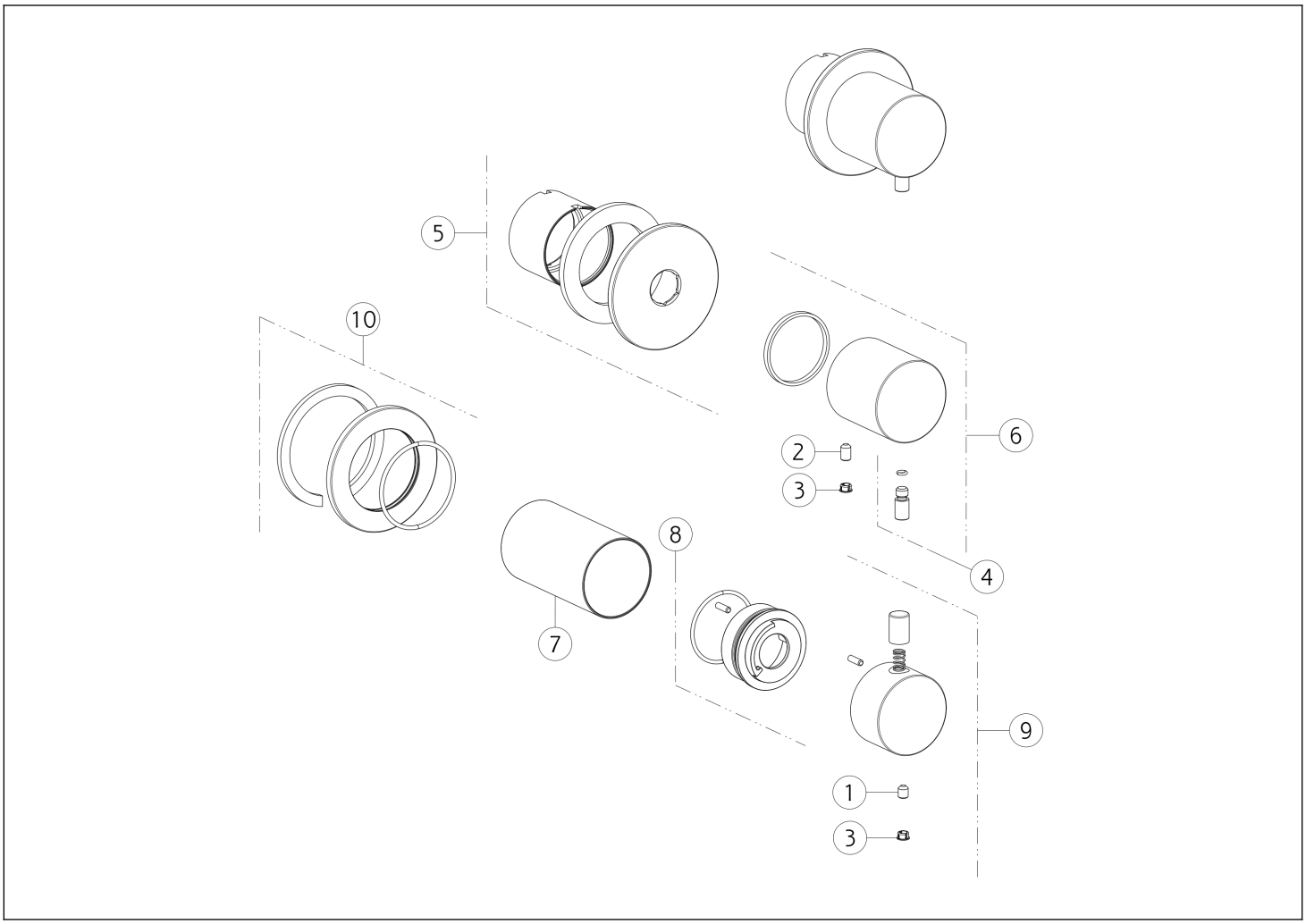

N°	Code	Description
1	SP00284	GRUB SCREW
2	SP02453	GRUB SCREW
3	SP00002	SCREW COVER
4	SP01624	LEVER
5	SP01736	ROSETTE

N°	Code	Description
6	SP01735	HANDLE
7	SP04654	FINISHED BUSH
8	SP01781	INDICATOR RING
9	SP01780	HANDLE
10	SP01665	ROSETTE

Gessi S.p.A. Parco Gessi, 13037 Serravalle Sesia (Vercelli) Italy Tel. +39 0163 454111 Fax. +39 0163 453150 - www.gessi.com - gessi@gessi.it This drawing, as required by law, may not be made public or reproduced without the written authorization of GESSI S.p.A. Copyright GESSI S.p.A.