GESSI

54388

GPF5438800000G000

GESSI 316

validity date
≥ 12/2017



External parts basin mixer, medium spout, without waste

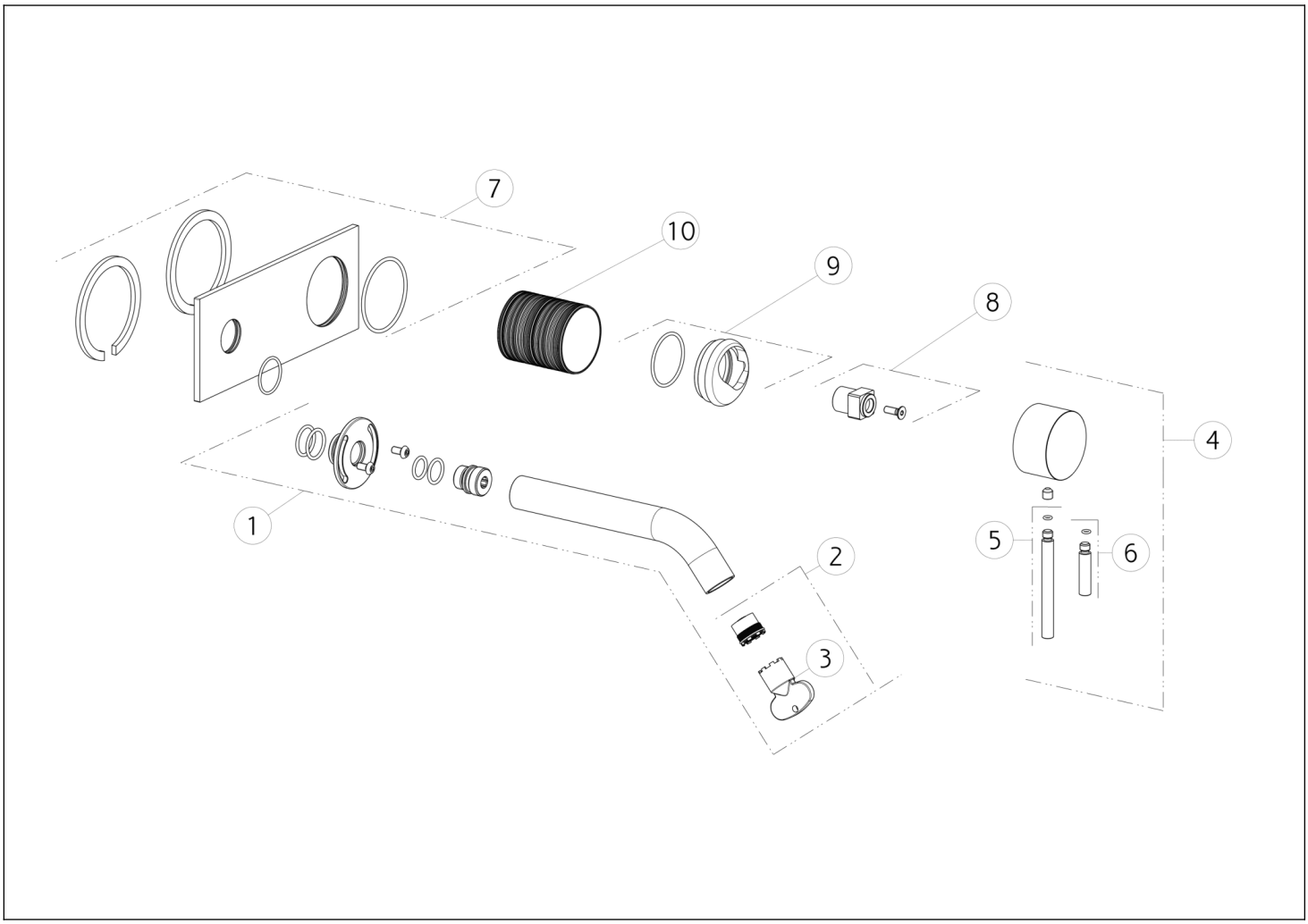

N°	Code	Description
1	SP01747	COMPLETE SPOUT
2	SP01608	AERATOR
3	SP00504	KEY
4	SP01746	HANDLE
5	SP01626	LEVER

N°	Code	Description
6	SP01625	LEVER
7	SP01650	FINISHING PLATE
8	SP01745	SPACER
9	SP01744	NUT
10	SP01756	FINISHED BUSH

Gessi S.p.A. Parco Gessi, 13037 Serravalle Sesia (Vercelli) Italy Tel. +39 0163 454111 Fax. +39 0163 453150 - www.gessi.com - gessi@gessi.it This drawing, as required by law, may not be made public or reproduced without the written authorization of GESSI S.p.A. Copyright GESSI S.p.A.