GESSI

54405

GPF5440500000G000

GESSI 316

validity date
≥ 11/2017



Separate control

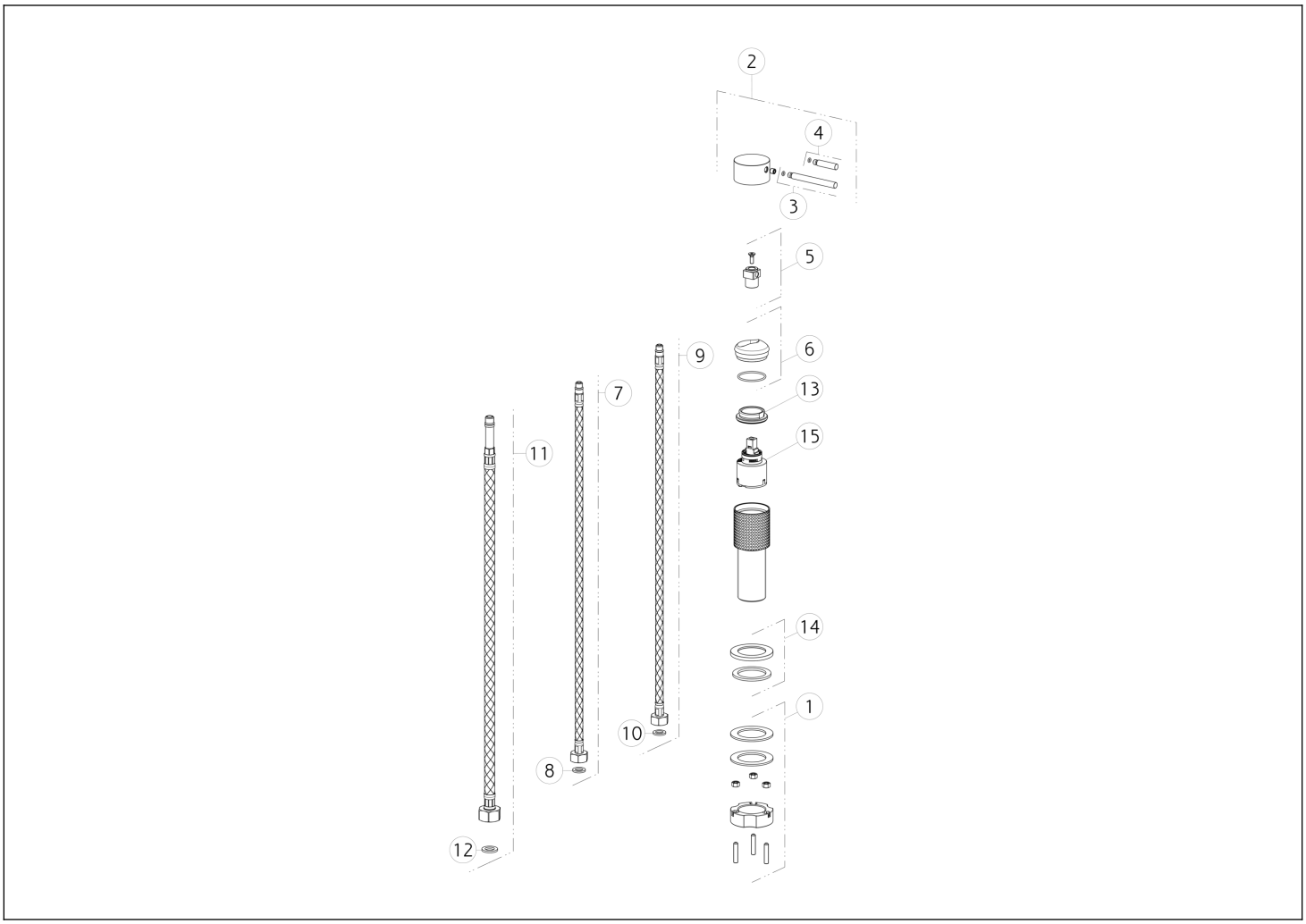

N°	Code	Description
1	SP02370	FIXING KIT
2	SP01746	HANDLE
3	SP01626	LEVER
4	SP01625	LEVER
5	SP01745	SPACER
6	SP01744	NUT
7	SP01285	RED SUPPLY HOSE
8	SP00064	GASKET

N°	Code	Description
9	SP01284	BLUE SUPPLY HOSE
10	SP00064	GASKET
11	SP01203	HOSE
12	SP00210	GASKET
13	SP01731	FIXING RING NUT
14	SP01702	BASE PLATE
15	SP00013	CARTRIDGE

Gessi S.p.A. Parco Gessi, 13037 Serravalle Sesia (Vercelli) Italy Tel. +39 0163 454111 Fax. +39 0163 453150 - www.gessi.com - gessi@gessi.it This drawing, as required by law, may not be made public or reproduced without the written authorization of GESSI S.p.A. Copyright GESSI S.p.A.