GESSI

54412

GPF5441200000G000

GESSI 316

validity date
≥ 12/2017



Three-holes basin mixer with spout, with flexible hoses. Without waste

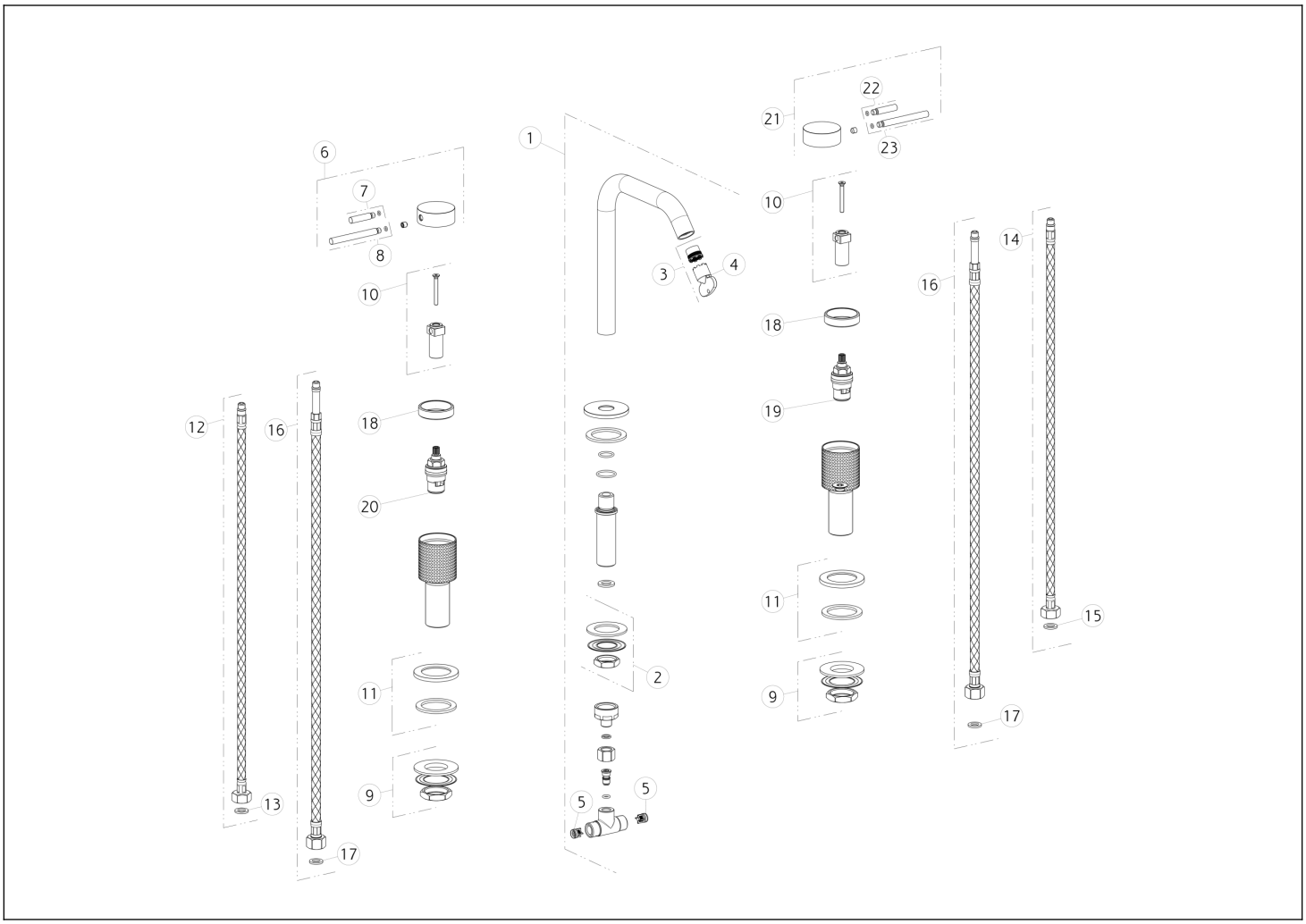

N°	Code	Description
1	SP01852	COMPLETE SPOUT
2	SP01720	FIXING KIT
3	SP01608	AERATOR
4	SP00504	KEY
5	SP00433	NON RETURN VALVE
6	SP01853	HANDLE WITH LOGO
7	SP01625	LEVER
8	SP01626	LEVER
9	SP01222	FIXING KIT
10	SP01849	BUSH
11	SP01702	BASE PLATE
12	SP01285	RED SUPPLY HOSE

N°	Code	Description
13	SP00064	GASKET
14	SP01284	BLUE SUPPLY HOSE
15	SP00064	GASKET
16	SP00987	HOSE
17	SP00064	GASKET
18	SP01850	RING
19	SP00590	HEADVALVE
20	SP00129	HEADVALVE
21	SP01848	HANDLE
22	SP01625	LEVER
23	SP01626	LEVER

Gessi S.p.A. Parco Gessi, 13037 Serravalle Sesia (Vercelli) Italy Tel. +39 0163 454111 Fax. +39 0163 453150 - www.gessi.com - gessi@gessi.it This drawing, as required by law, may not be made public or reproduced without the written authorization of GESSI S.p.A. Copyright GESSI S.p.A.