GESSI

54419

GPF5441900000G000

GESSI 316

validity date
≥ 01/2018



External parts mixer one-way diverter

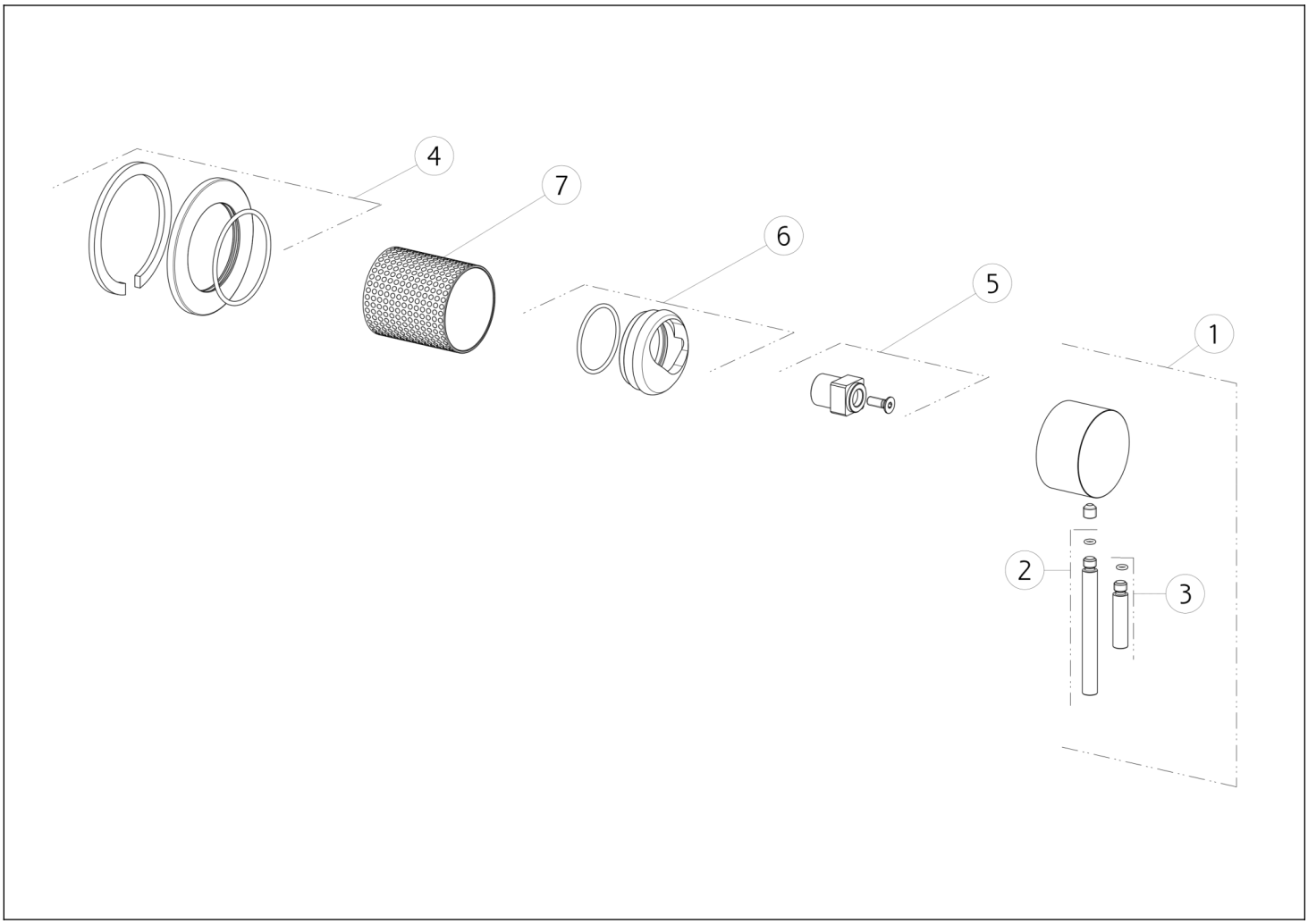

N°	Code	Description
1	SP01746	HANDLE
2	SP01626	LEVER
3	SP01625	LEVER
4	SP01665	ROSETTE

N°	Code	Description
5	SP01745	SPACER
6	SP01744	NUT
7	SP01753	FINISHED BUSH

Gessi S.p.A. Parco Gessi, 13037 Serravalle Sesia (Vercelli) Italy Tel. +39 0163 454111 Fax. +39 0163 453150 - www.gessi.com - gessi@gessi.it This drawing, as required by law, may not be made public or reproduced without the written authorization of GESSI S.p.A. Copyright GESSI S.p.A.