GESSI

54494

GPF5449400000G000

GESSI 316

validity date
≥ 06/2018



External parts three-holes basin mixer with long spout, without waste.

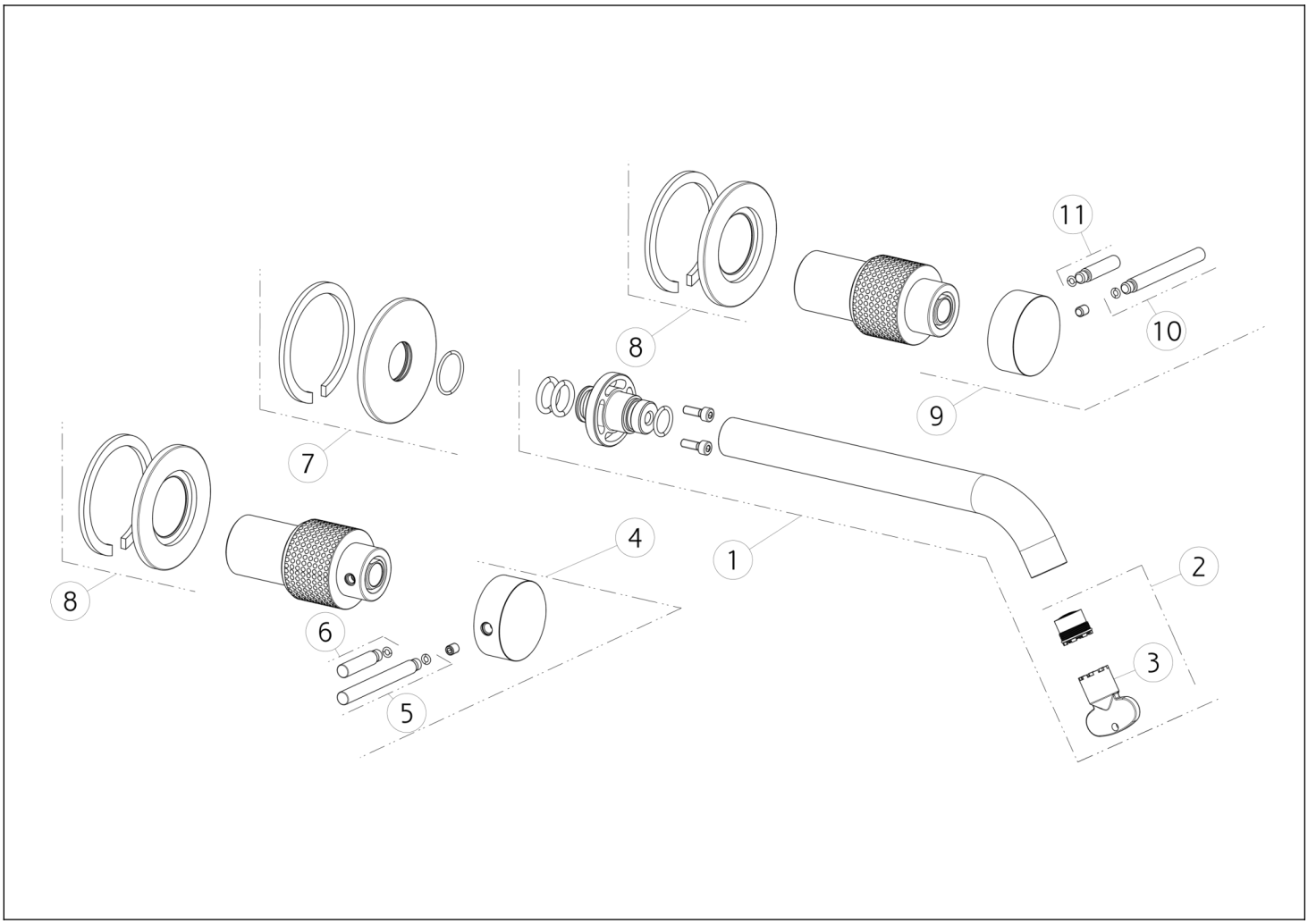

N°	Code	Description
1	SP02159	SPOUT
2	SP01608	AERATOR
3	SP00504	KEY
4	SP02180	HANDLE
5	SP01626	LEVER
6	SP01625	LEVER

N°	Code	Description
7	SP01719	ROSETTE
8	SP02178	ROSETTE
9	SP02179	HANDLE WITH LOGO
10	SP01626	LEVER
11	SP01625	LEVER

Gessi S.p.A. Parco Gessi, 13037 Serravalle Sesia (Vercelli) Italy Tel. +39 0163 454111 Fax. +39 0163 453150 - www.gessi.com - gessi@gessi.it This drawing, as required by law, may not be made public or reproduced without the written authorization of GESSI S.p.A. Copyright GESSI S.p.A.