54514

GPF5451400000G000

GESSI 316

validity date
≥ 12/2017



External parts for wall-mounted thermostatic high-capacity mixer. Vertical/horizontal setting up with TWO SEPARATE EXITS

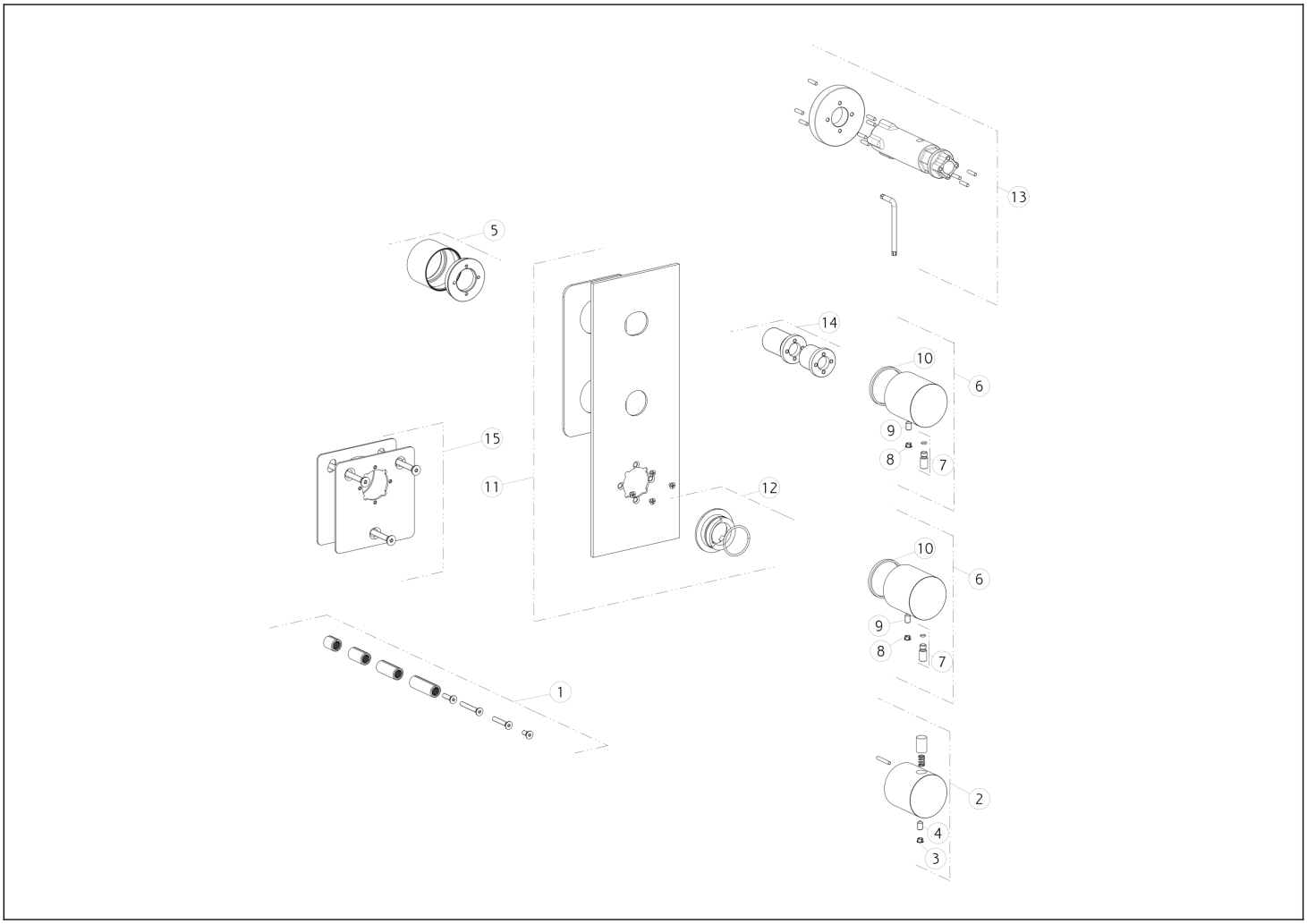

N°	Code	Description
1	SP01931	EXTENSION
2	SP01742	HANDLE
3	SP00002	SCREW COVER
4	SP02453	SCREW
5	SP02441	BUSH
6	SP01735	HANDLE
7	SP01624	LEVER
8	SP00002	SCREW COVER

N°	Code	Description
9	SP02453	SCREW
10	SP01737	ANTIFRICTION RING
11	SP02124	FINISHING PLATE
12	SP01739	INDICATOR RING
13	SP01932	SPECIAL TOOL
14	SP02437	NIPPLE
15	SP01738	PLATE

Gessi S.p.A. Parco Gessi, 13037 Serravalle Sesia (Vercelli) Italy Tel. +39 0163 454111 Fax. +39 0163 453150 - www.gessi.com - gessi@gessi.it This drawing, as required by law, may not be made public or reproduced without the written authorization of GESSI S.p.A. Copyright GESSI S.p.A.