GESSI

54554

GPF5455400000G000

GESSI 316

validity date
≥ 02/2018



External parts wall-mounted thermostatic high-capacity mixer

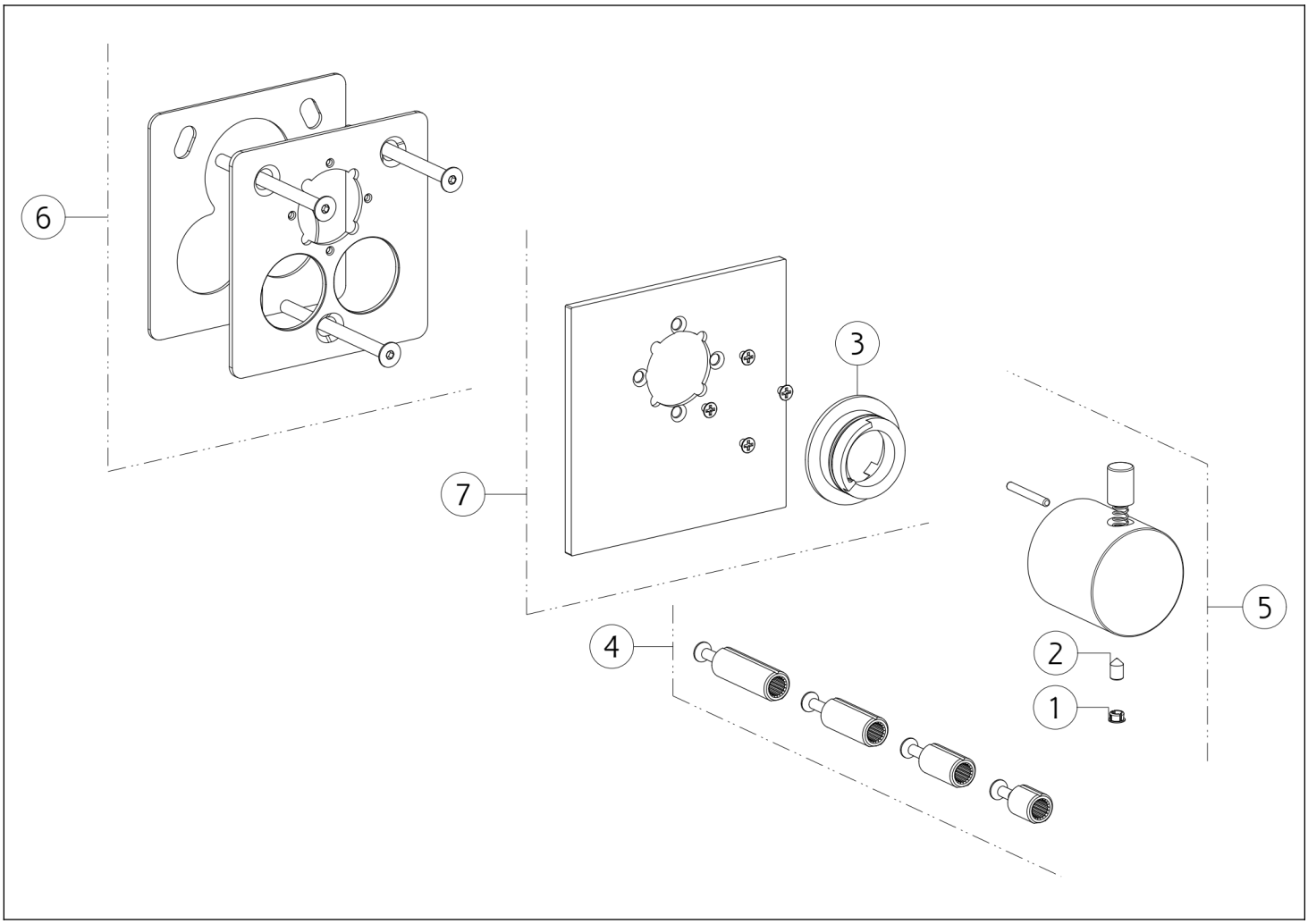

N°	Code	Description
1	SP00002	SCREW COVER
2	SP02453	SCREW
3	SP01739	INDICATOR RING
4	SP01931	EXTENSION

N°	Code	Description
5	SP01742	HANDLE
6	SP01738	PLATE
7	SP01740	FINISHING PLATE

Gessi S.p.A. Parco Gessi, 13037 Serravalle Sesia (Vercelli) Italy Tel. +39 0163 454111 Fax. +39 0163 453150 - www.gessi.com - gessi@gessi.it This drawing, as required by law, may not be made public or reproduced without the written authorization of GESSI S.p.A. Copyright GESSI S.p.A.