54564

GPF5456400000G000

GESSI 316

validity date
≥ 12/2017



External parts for stop valve for thermostatic high-capacity mixer.

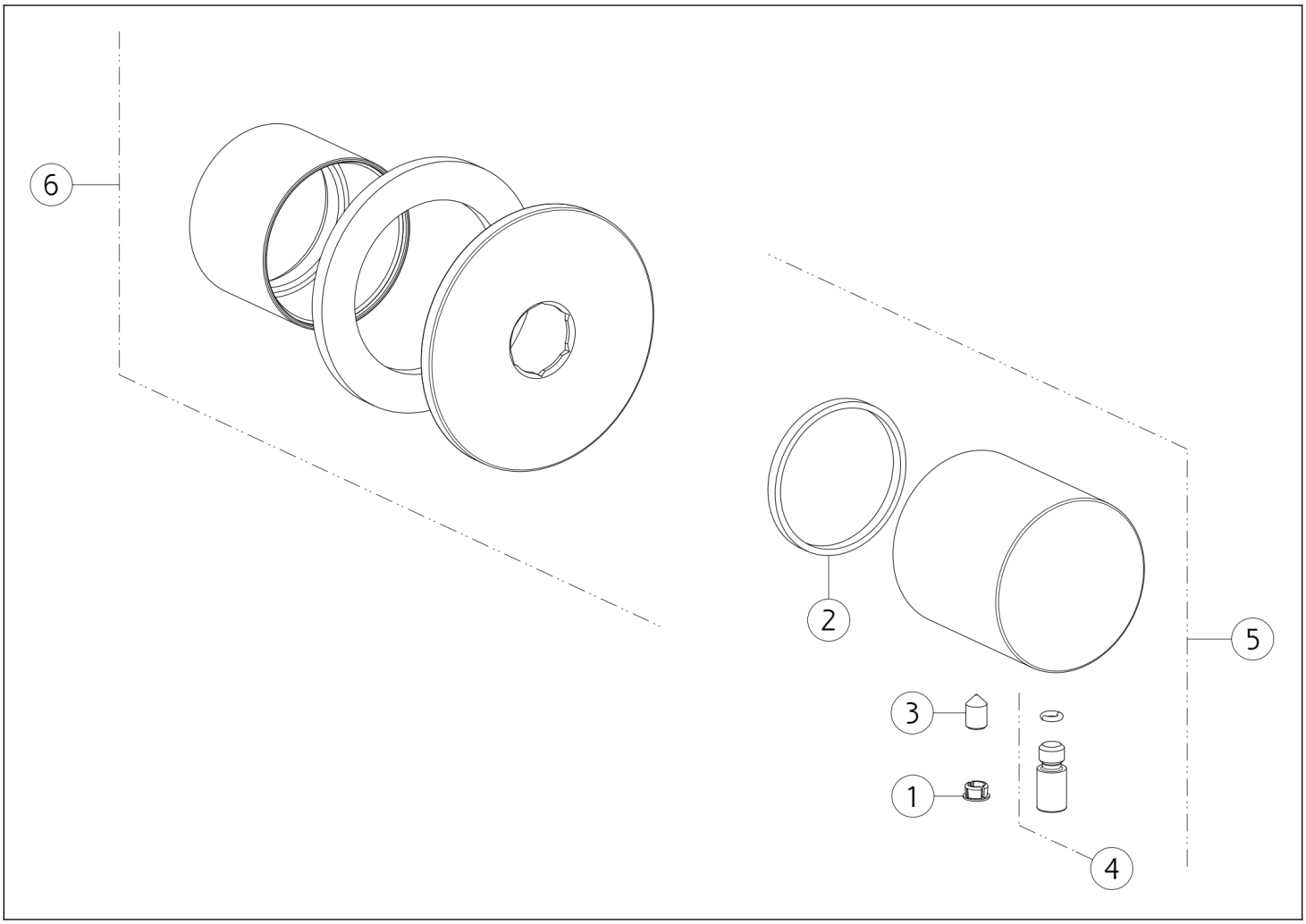

N°	Code	Description
1	SP00002	SCREW COVER
2	SP01737	ANTIFRICTION RING
3	SP02453	SCREW

N°	Code	Description
4	SP01624	LEVER
5	SP01735	HANDLE
6	SP01736	COVER

Gessi S.p.A. Parco Gessi, 13037 Serravalle Sesia (Vercelli) Italy Tel. +39 0163 454111 Fax. +39 0163 453150 - www.gessi.com - gessi@gessi.it This drawing, as required by law, may not be made public or reproduced without the written authorization of GESSI S.p.A. Copyright GESSI S.p.A.