GESSI

54594

GPF5459400000G000

GESSI 316

validity date
≥ 11/2020



Pull-out handshower drain kit. Not fitting items 01669, 01658, 01663 and 01664.

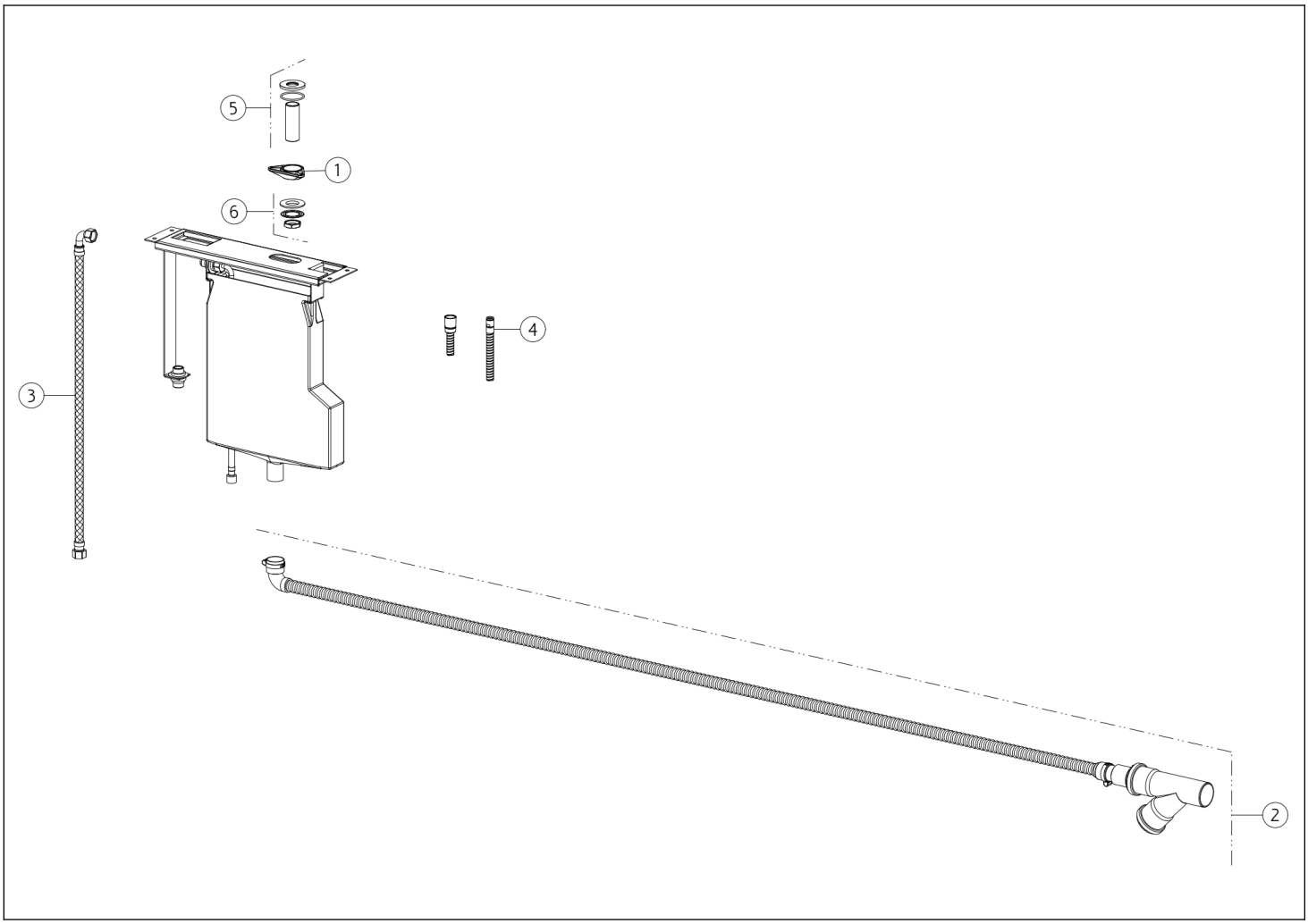

N°	Code	Description
1	SP00329	TRIANGULAR FLANGE
2	SP00661	DRAINAGE DEVICE
3	SP01305	HOSE

N°	Code	Description
4	SP01798	HOSE
5	SP01813	BASE
6	SP01222	FIXING SET

Gessi S.p.A. Parco Gessi, 13037 Serravalle Sesia (Vercelli) Italy Tel. +39 0163 454111 Fax. +39 0163 453150 - www.gessi.com - gessi@gessi.it This drawing, as required by law, may not be made public or reproduced without the written authorization of GESSI S.p.A. Copyright GESSI S.p.A.