GESSI

54701

GPF5470100000G000

GESSI 316

validity date
≥ 01/2018



Wall-mounted soap dish, white

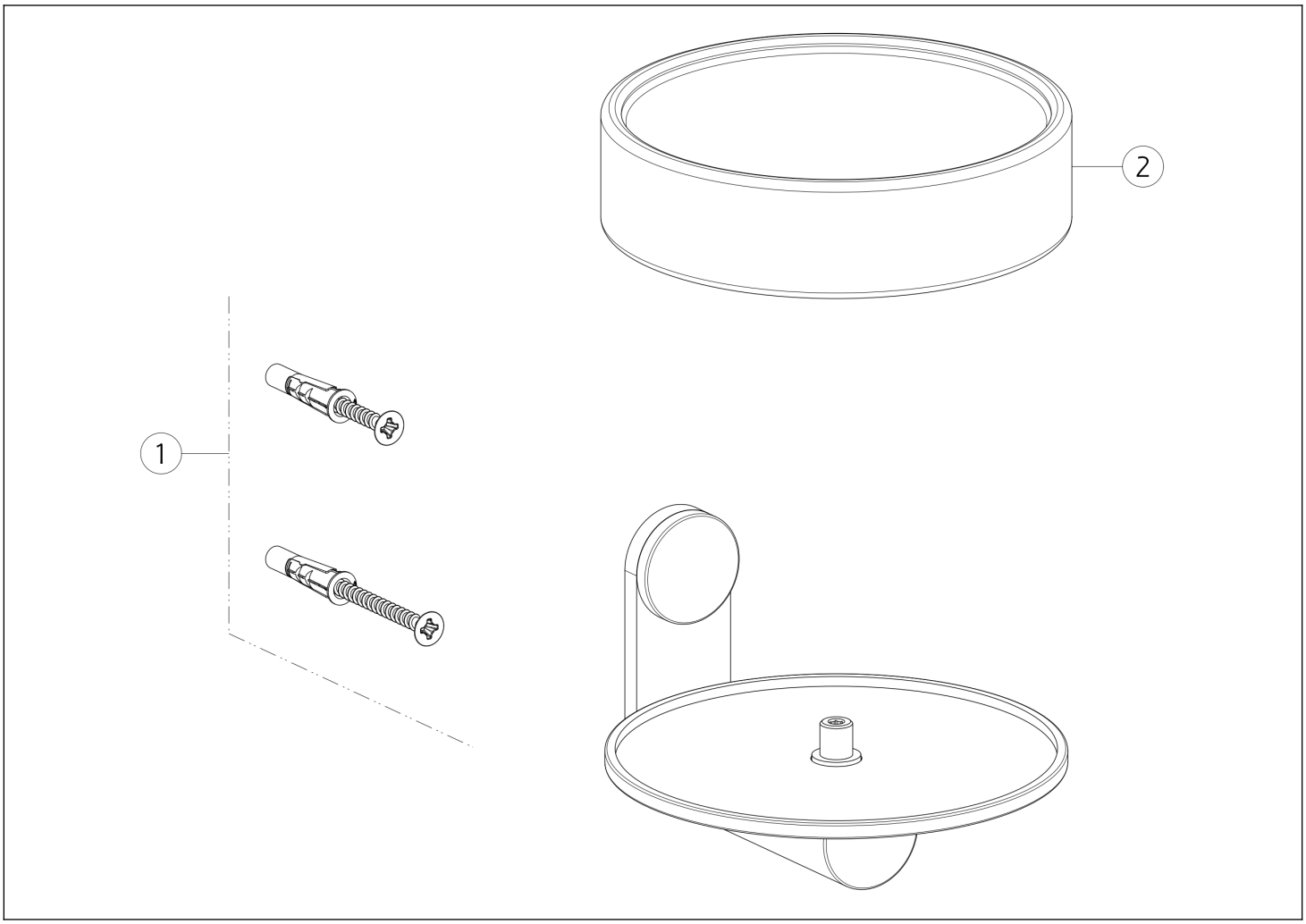

N°	Code	Description
1	SP00031	FIXING SET

N°	Code	Description
2	SP02604	SOAP HOLDER

Gessi S.p.A. Parco Gessi, 13037 Serravalle Sesia (Vercelli) Italy Tel. +39 0163 454111 Fax. +39 0163 453150 - www.gessi.com - gessi@gessi.it This drawing, as required by law, may not be made public or reproduced without the written authorization of GESSI S.p.A. Copyright GESSI S.p.A.