GESSI

# 54713

GPF5471310000G000

## GESSI 316

validity date
≥ 02/2021



Wall-mounted liquid soap dispenser , white

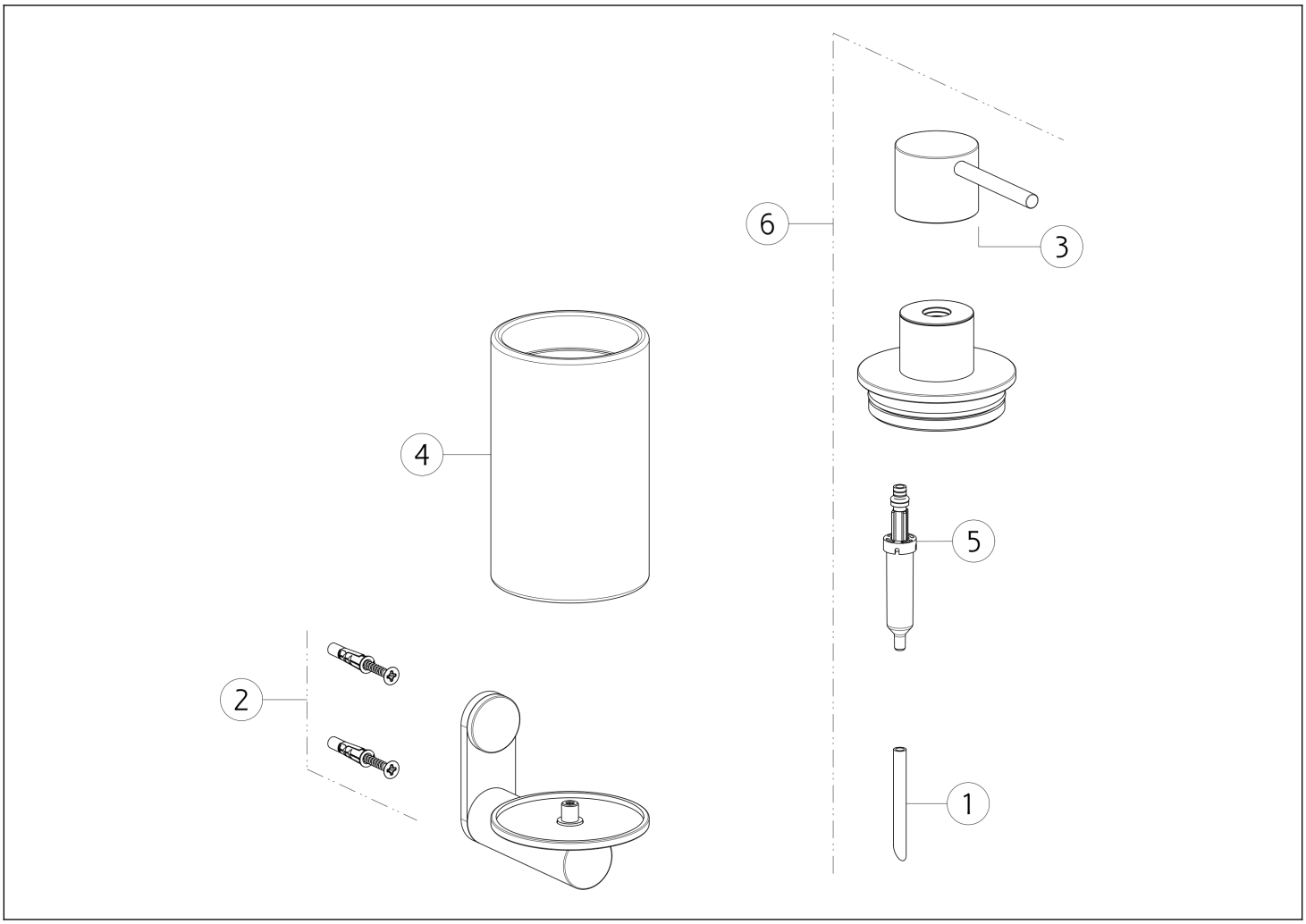


| N° | Code | Description |
|---|---|---|
| 1 | SP00198 | TUBE |
| 2 | SP00031 | FIXING SET |
| 3 | SP03736 | HANDLE |

| N° | Code | Description |
|---|---|---|
| 4 | SP02331 | GLASS |
| 5 | SP00040 | DISPENSER PUMP |
| 6 | SP02890 | DISPENSER |

Gessi S.p.A. Parco Gessi, 13037 Serravalle Sesia (Vercelli) Italy Tel. +39 0163 454111 Fax. +39 0163 453150 - www.gessi.com - gessi@gessi.it This drawing, as required by law, may not be made public or reproduced without the written authorization of GESSI S.p.A. Copyright GESSI S.p.A.