GESSI

57010

GPF5701000000G000

AFILO

validity date
≥ 10/2017



Cover for 300x500 multifunction system

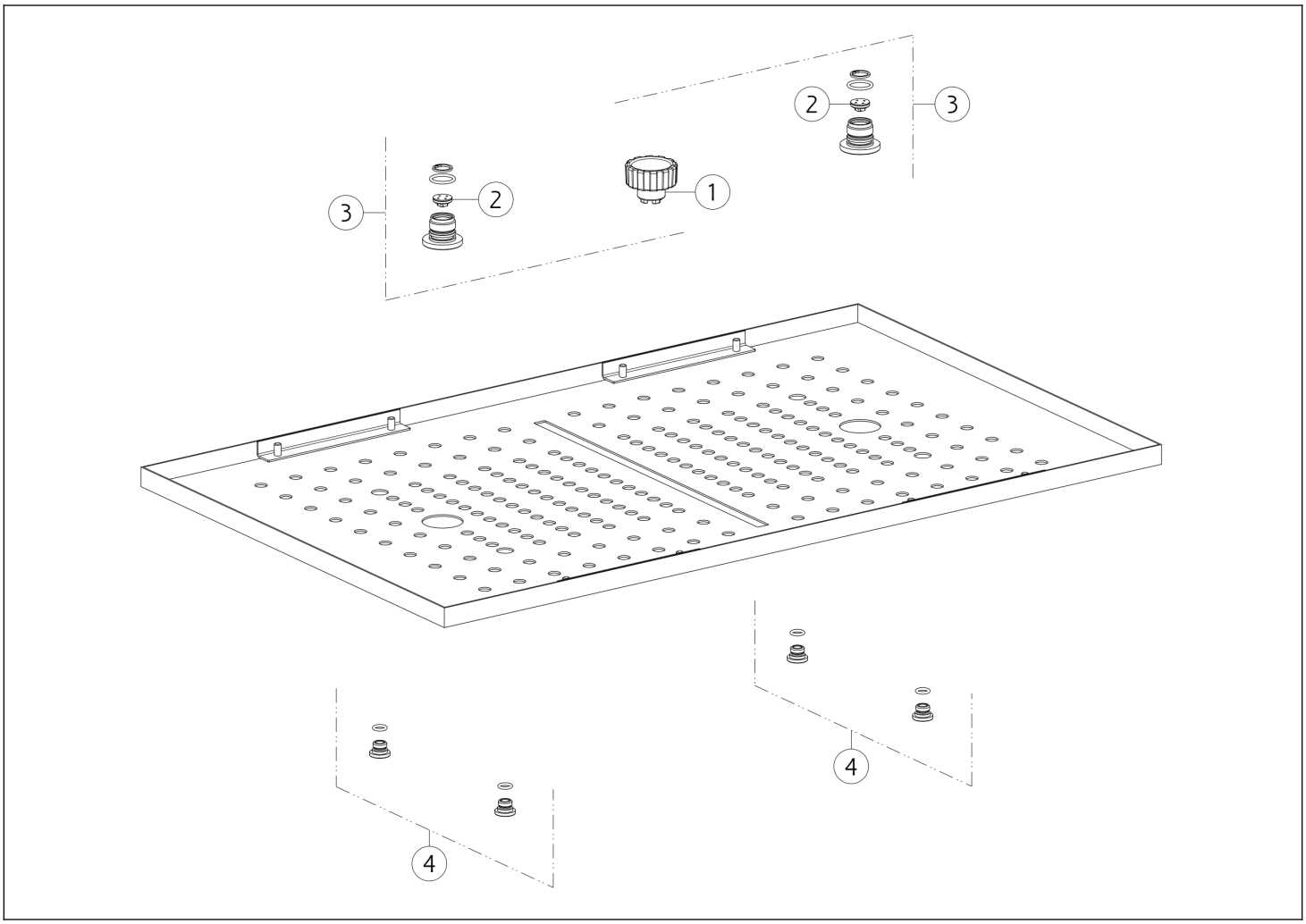

N°	Code	Description
1	SP03886	SPECIAL TOOL
2	SP03888	ATOMIZER

N°	Code	Description
3	SP01912	ATOMIZER
4	SP01904	SCREW

Gessi S.p.A. Parco Gessi, 13037 Serravalle Sesia (Vercelli) Italy Tel. +39 0163 454111 Fax. +39 0163 453150 - www.gessi.com - gessi@gessi.it This drawing, as required by law, may not be made public or reproduced without the written authorization of GESSI S.p.A. Copyright GESSI S.p.A.