GESSI

57211

GPF5721100000G000

SPOTWATER

validity date
≥ 07/2019



Wall-mounted adjustable showerhead INTRECCIO. Multi-spray function

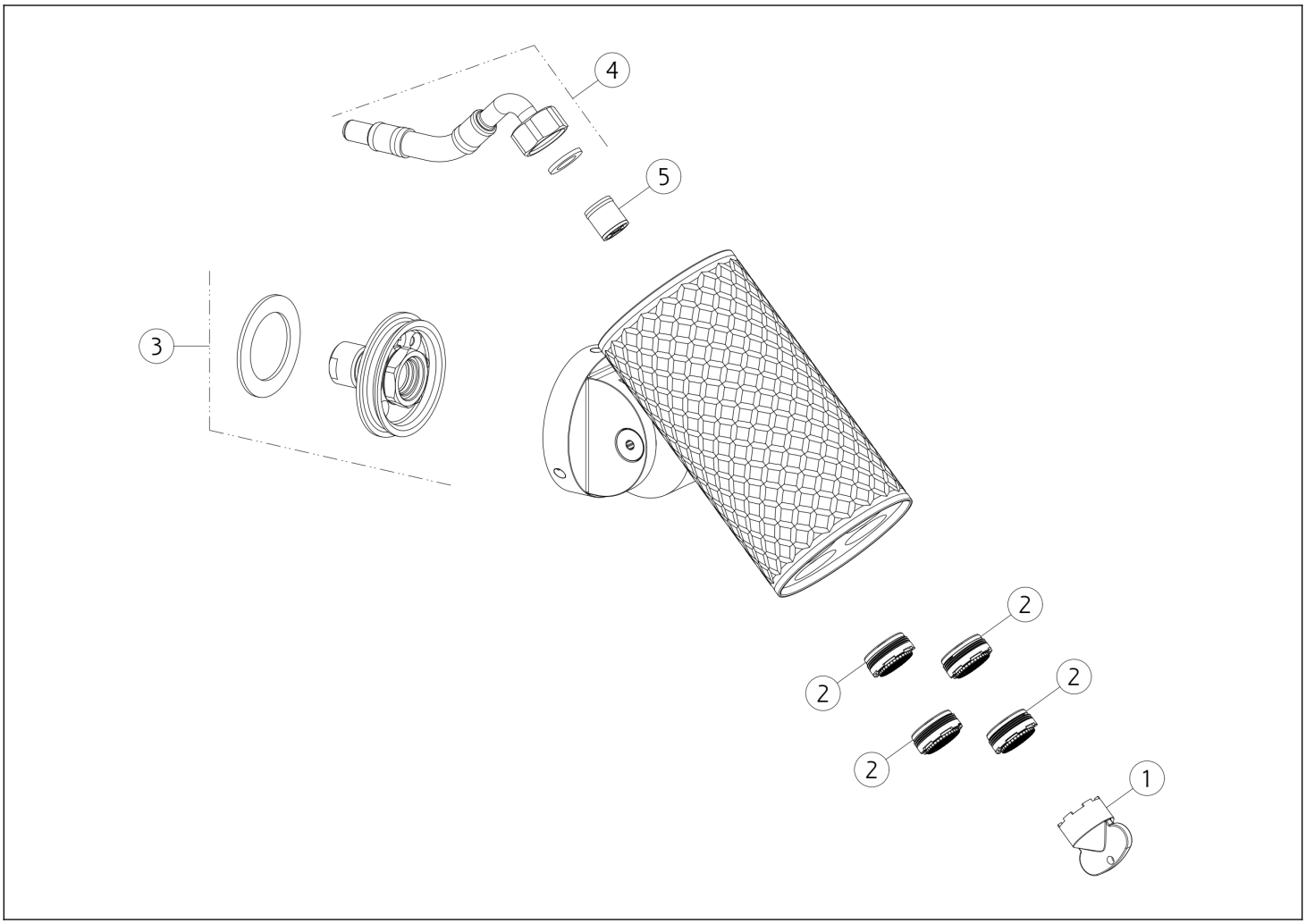

N°	Code	Description
1	SP00151	SPECIAL TOOL
2	SP03166	AERATOR
3	SP02561	JOINT

N°	Code	Description
4	SP02973	HOSE
5	SP00014	NON RETURN VALVE

 This drawing, as required by law, may not be made public or reproduced without the written authorization of GESSI S.p.A. Copyright GESSI S.p.A.