GESSI

57241

GPF5724100000G000

SPOTWATER

validity date
≥ 04/2019



Wall-mounted adjustable showerhead TRAME. Multi-spray function

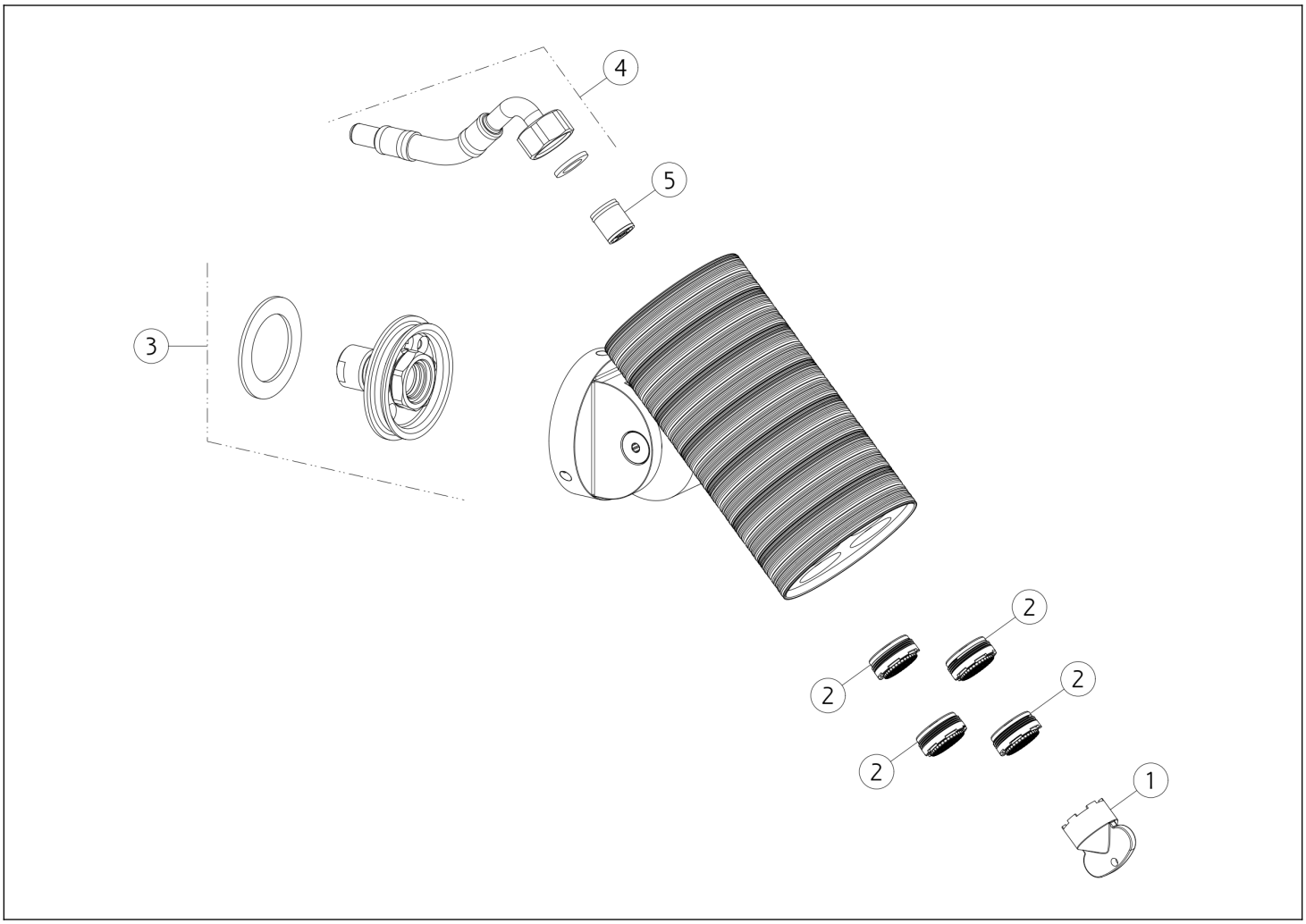

N°	Code	Description
1	SP00151	SPECIAL TOOL
2	SP03166	AERATOR
3	SP02561	JOINT

N°	Code	Description
4	SP02973	HOSE
5	SP00014	NON RETURN VALVE

Gessi S.p.A. Parco Gessi, 13037 Serravalle Sesia (Vercelli) Italy Tel. +39 0163 454111 Fax. +39 0163 453150 - www.gessi.com - gessi@gessi.it This drawing, as required by law, may not be made public or reproduced without the written authorization of GESSI S.p.A. Copyright GESSI S.p.A.