GESSI

# 57245

GPF5724500000G000

# SPOTWATER

validity date
≥ 01/2020



Wall-mounted adjustable showerhead TRAME. Mist function

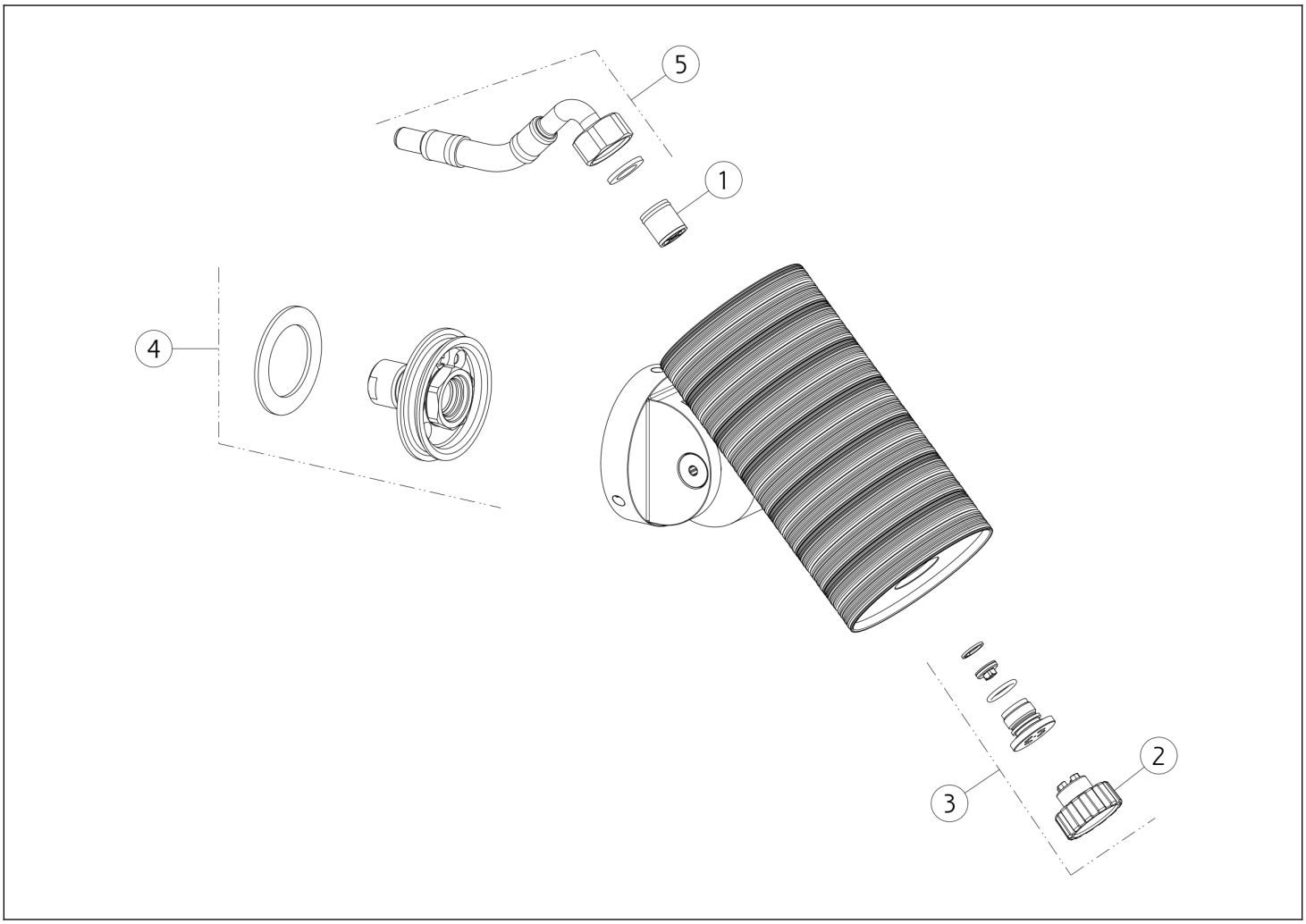


| N° | Code | Description |
|---|---|---|
| 1 | SP01634 | FLOW REGOLATOR |
| 2 | SP03886 | SPECIAL TOOL |
| 3 | SP01912 | ATOMIZER |

| N° | Code | Description |
|---|---|---|
| 4 | SP02561 | JOINT |
| 5 | SP02973 | HOSE |

Gessi S.p.A. Parco Gessi, 13037 Serravalle Sesia (Vercelli) Italy Tel. +39 0163 454111 Fax. +39 0163 453150 - www.gessi.com - gessi@gessi.it This drawing, as required by law, may not be made public or reproduced without the written authorization of GESSI S.p.A. Copyright GESSI S.p.A.