GESSI

57263

GPF5726300000G000

SPOTWATER

validity date
≥ 04/2019



Wall-mounted adjustable showerhead. Rain function

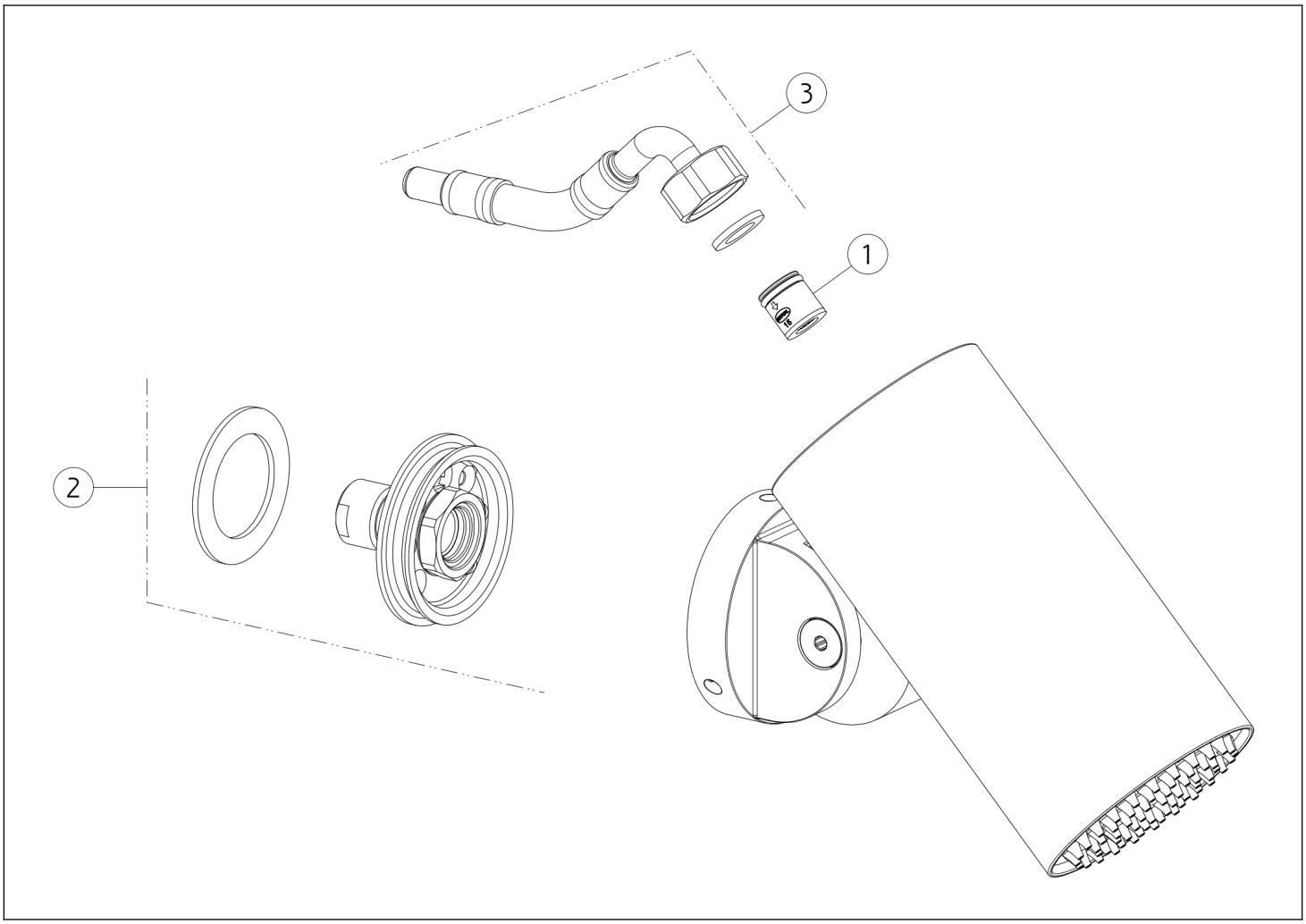

N°	Code	Description
1	SP01634	FLOW REGOLATOR
2	SP02561	JOINT

N°	Code	Description
3	SP02973	HOSE

 This drawing, as required by law, may not be made public or reproduced without the written authorization of GESSI S.p.A. Copyright GESSI S.p.A.