GESSI

57269

GPF5726900000G000

SPOTWATER

validity date
≥ 12/2022



Wall-mounted adjustable shower head. RAINFALL/SPRAY/MASSAGE function.

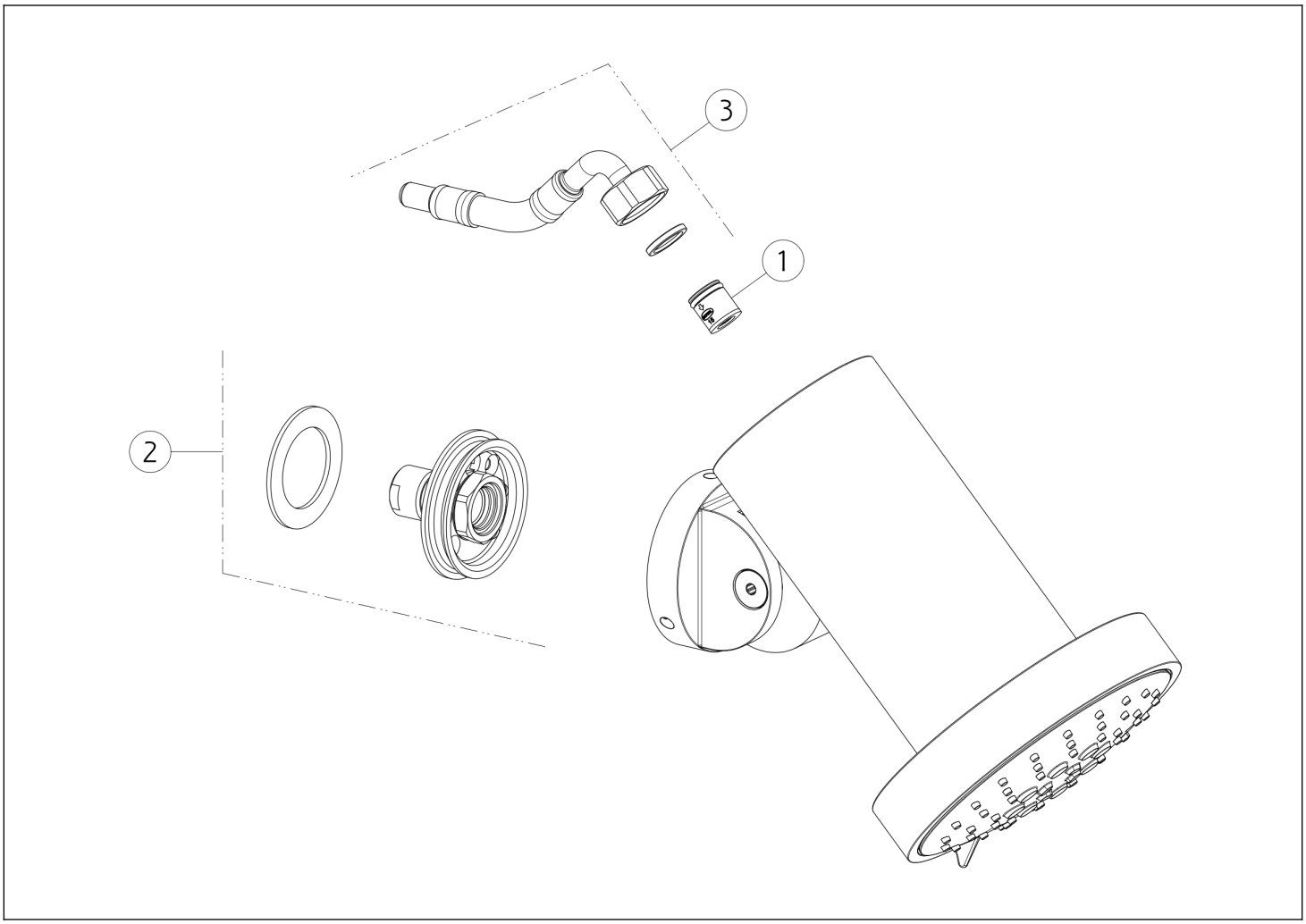

N°	Code	Description
1	SP00014	NON RETURN VALVE
2	SP02561	JOINT

N°	Code	Description
3	SP02973	HOSE

Gessi S.p.A. Parco Gessi, 13037 Serravalle Sesia (Vercelli) Italy Tel. +39 0163 454111 Fax. +39 0163 453150 - www.gessi.com - gessi@gessi.it This drawing, as required by law, may not be made public or reproduced without the written authorization of GESSI S.p.A. Copyright GESSI S.p.A.