GESSI

58006

GPF58006000000G000

INCISO

validity date
≥ 12/2020



High basin mixer, flexible connections, without waste

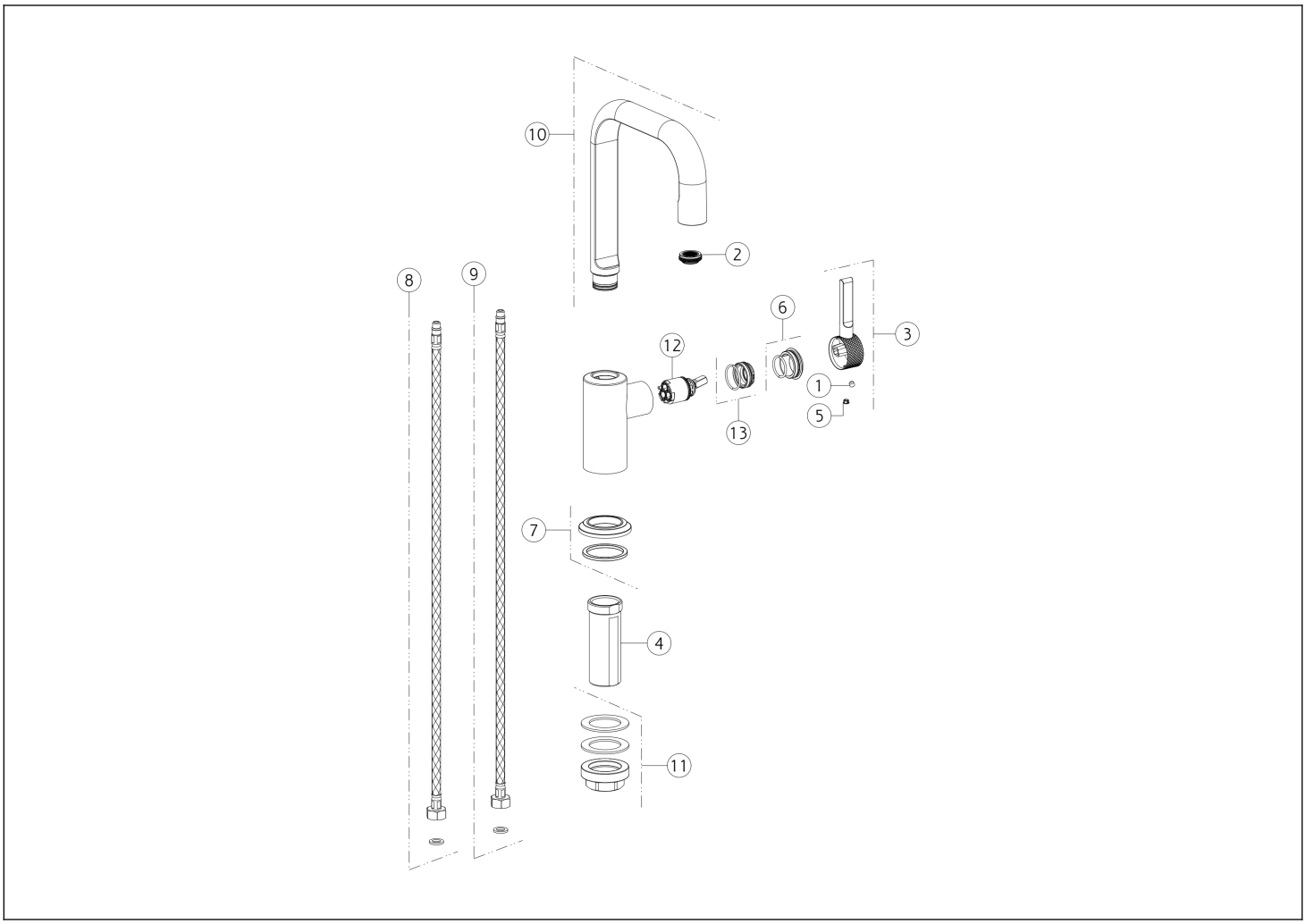

N°	Code	Description
1	SP00610	GRUB SCREW
2	SP02115	AERATOR
3	SP03340	HANDLE
4	SP01701	SHANK
5	SP00002	SCREW COVER
6	SP03266	FINISHING RING NUT
7	SP03306	BASE PLATE

N°	Code	Description
8	SP01591	BLUE SUPPLY HOSE
9	SP01590	RED SUPPLY HOSE
10	SP03949	COMPLETE SPOUT
11	SP02370	FIXING KIT
12	SP02288	CARTRIDGE
13	SP01278	FIXING RING NUT

Gessi S.p.A. Parco Gessi, 13037 Serravalle Sesia (Vercelli) Italy Tel. +39 0163 454111 Fax. +39 0163 453150 - www.gessi.com - gessi@gessi.it This drawing, as required by law, may not be made public or reproduced without the written authorization of GESSI S.p.A. Copyright GESSI S.p.A.