GESSI

58101

GPF5810100000G000

INCISO

validity date
≥ 07/2018



Wall-mounted spout basin, long spout

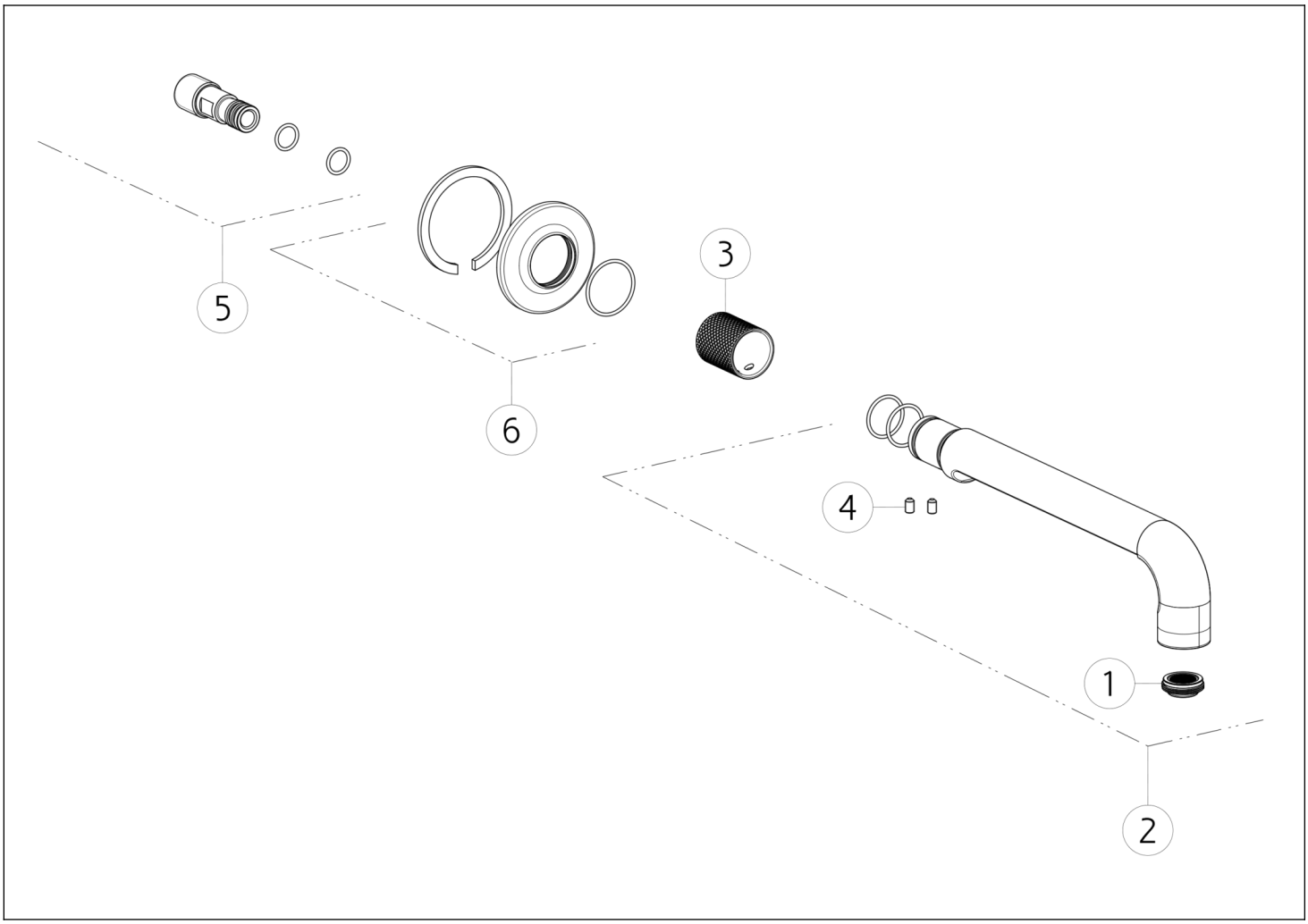

N°	Code	Description
1	SP02115	AERATOR
2	SP01985	SPOUT
3	SP02454	FINISHING BUSHING

N°	Code	Description
4	SP02453	SCREW
5	SP02352	JOINT
6	SP02393	COVER

Gessi S.p.A. Parco Gessi, 13037 Serravalle Sesia (Vercelli) Italy Tel. +39 0163 454111 Fax. +39 0163 453150 - www.gessi.com - gessi@gessi.it This drawing, as required by law, may not be made public or reproduced without the written authorization of GESSI S.p.A. Copyright GESSI S.p.A.