GESSI

58109

GPF5810900000G000

INCISO

validity date
≥ 04/2018



External parts mixer one-way diverter

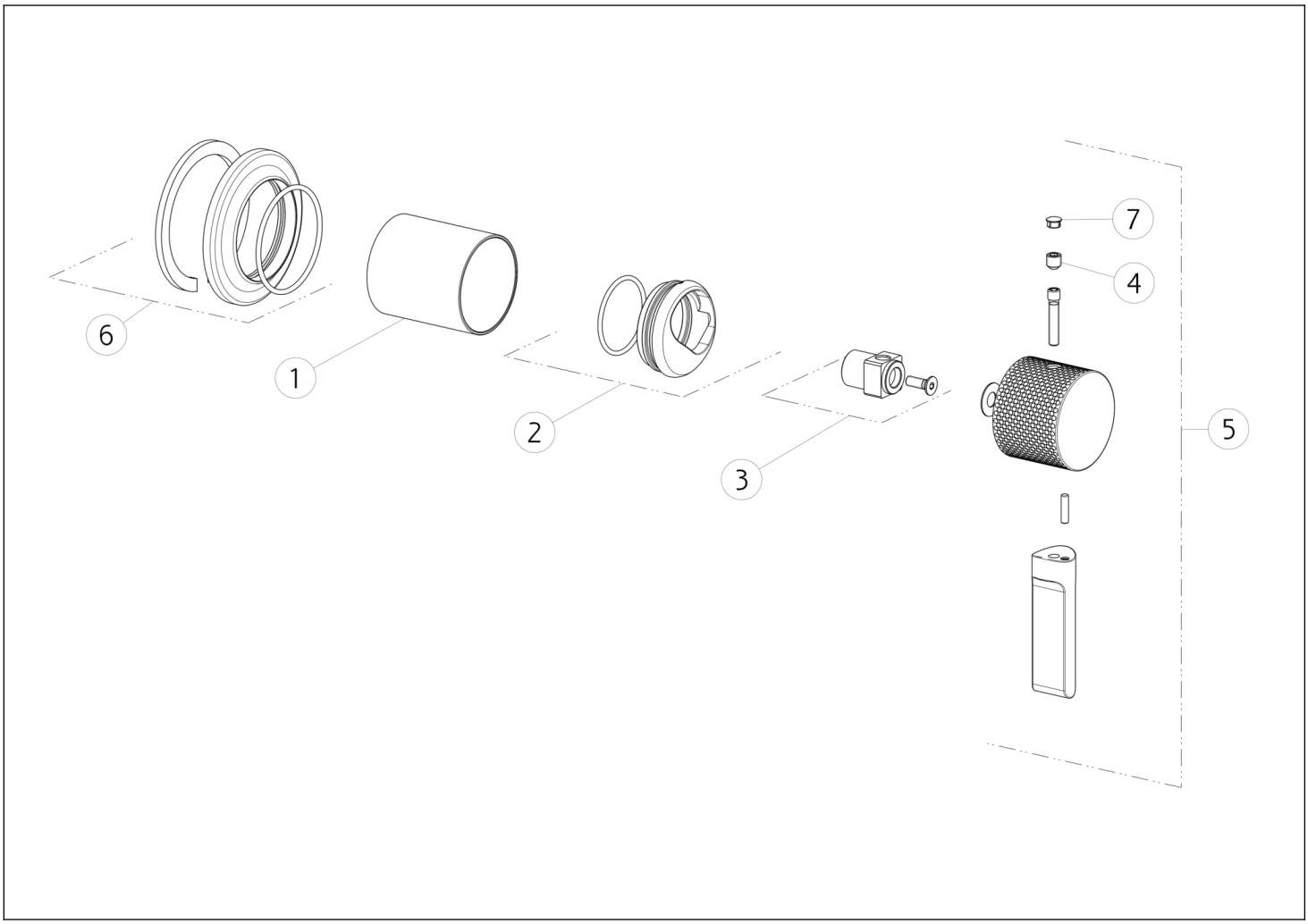

N°	Code	Description
1	SP02377	FINISHED BUSH
2	SP02305	FINISHING RING NUT
3	SP01745	SPACER
4	SP00153	GRUB SCREW

N°	Code	Description
5	SP02360	HANDLE
6	SP02344	ROSETTE
7	SP00002	SCREW COVER

Gessi S.p.A. Parco Gessi, 13037 Serravalle Sesia (Vercelli) Italy Tel. +39 0163 454111 Fax. +39 0163 453150 - www.gessi.com - gessi@gessi.it This drawing, as required by law, may not be made public or reproduced without the written authorization of GESSI S.p.A. Copyright GESSI S.p.A.