GESSI

58111

GPF5811100000G000

INCISO

validity date
≥ 03/2019



Three-holes basin mixer , with flexible hoses with waste

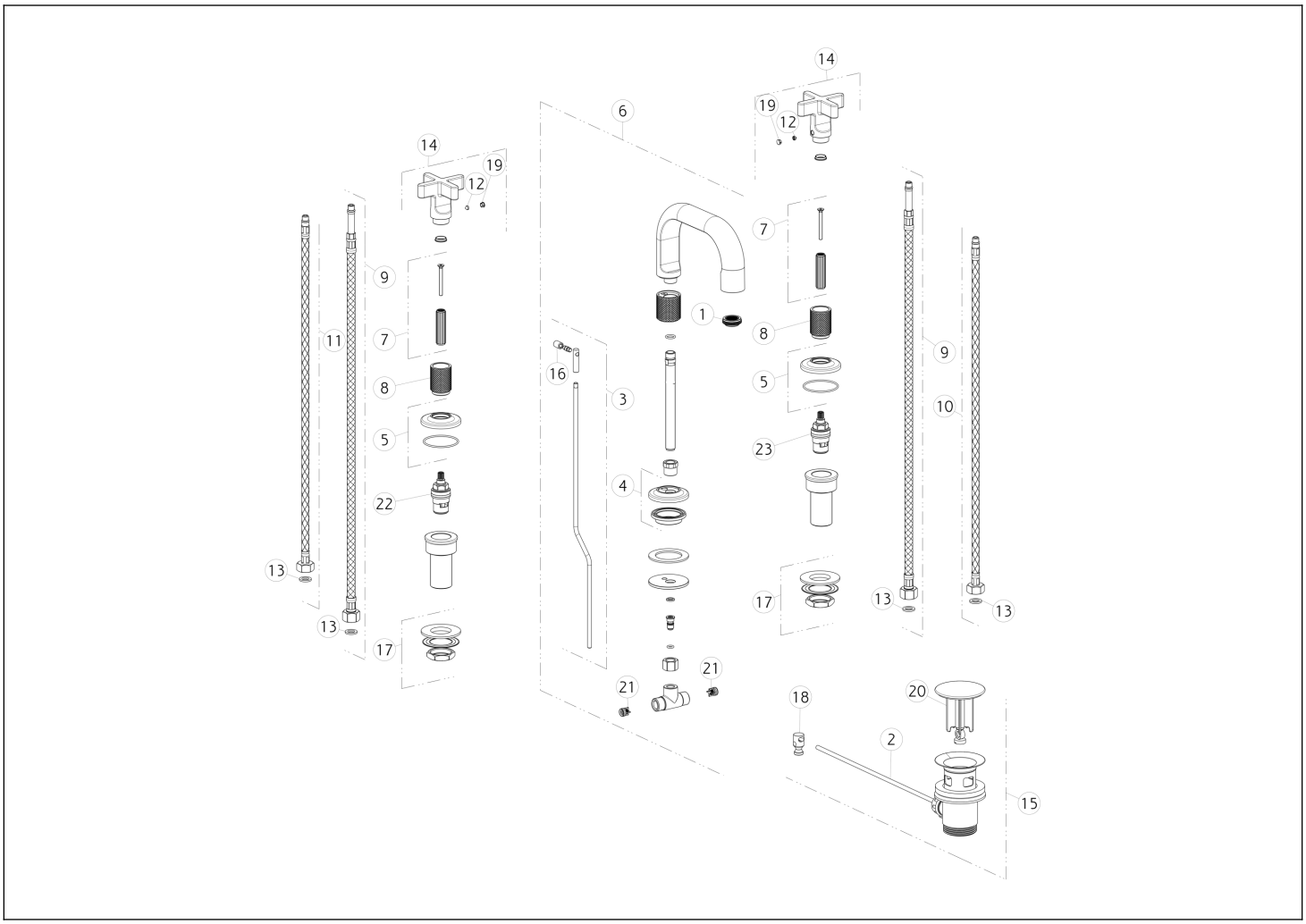

N°	Code	Description
2	SP00218	ROD
3	SP02113	POP-UP WASTE ROD
4	SP02114	BASE PLATE
5	SP02603	BASE PLATE
6	SP02392	COMPLETE SPOUT
7	SP02602	BUSH
8	SP01987	FINISHED BUSH
9	SP02468	HOSE
10	SP01284	BLUE SUPPLY HOSE
11	SP01285	RED SUPPLY HOSE
12	SP00169	GRUB SCREW

N°	Code	Description
13	SP00064	GASKET
14	SP02260	HANDLE
15	PF29263	BASIN WASTE
16	SP00927	KNOB
17	SP01222	FIXING KIT
18	SP00219	JOINT
19	SP00002	SCREW COVER
20	SP00772	WASTE COVER CAP
21	SP00433	NON RETURN VALVE
22	SP00129	HEADVALVE
23	SP00590	HEADVALVE

Gessi S.p.A. Parco Gessi, 13037 Serravalle Sesia (Vercelli) Italy Tel. +39 0163 454111 Fax. +39 0163 453150 - www.gessi.com - gessi@gessi.it This drawing, as required by law, may not be made public or reproduced without the written authorization of GESSI S.p.A. Copyright GESSI S.p.A.