GESSI

58114

GPF5811400000G000

INCISO

validity date
≥ 04/2018



Medium version three-hole basin mixer, with flexible hoses. Without waste

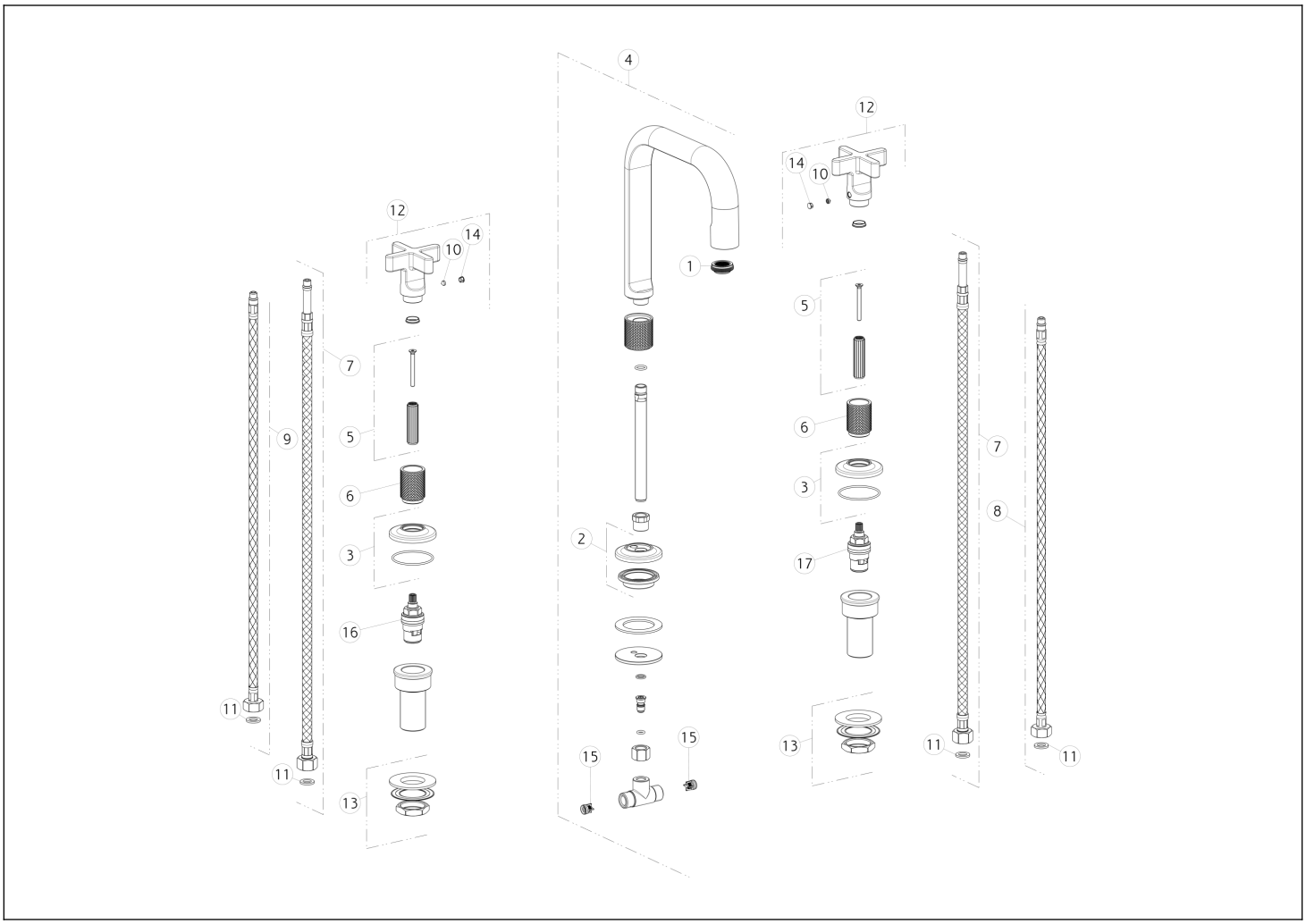

N°	Code	Description
1	SP02115	AERATOR
2	SP02114	BASE
3	SP02603	BASE
4	SP01907	COMPLETE SPOUT
5	SP02602	BUSH
6	SP01987	FINISHING BUSHING
7	SP02468	HOSE
8	SP01284	BLU SUPPLY HOSE
9	SP01285	RED SUPPLY HOSE

N°	Code	Description
10	SP00169	SCREW
11	SP00064	GASKET
12	SP02260	HANDLE
13	SP01222	FIXING SET
14	SP00002	SCREW COVER
15	SP00433	NON RETURN VALVE
16	SP00129	HEADVALVE
17	SP00590	HEADVALVE

Gessi S.p.A. Parco Gessi, 13037 Serravalle Sesia (Vercelli) Italy Tel. +39 0163 454111 Fax. +39 0163 453150 - www.gessi.com - gessi@gessi.it This drawing, as required by law, may not be made public or reproduced without the written authorization of GESSI S.p.A. Copyright GESSI S.p.A.