GESSI

58129

GPF5812900000G000

INCISO

validity date
≥ 03/2021



External parts for freestanding external bath mixer with handshower and automatic diverter

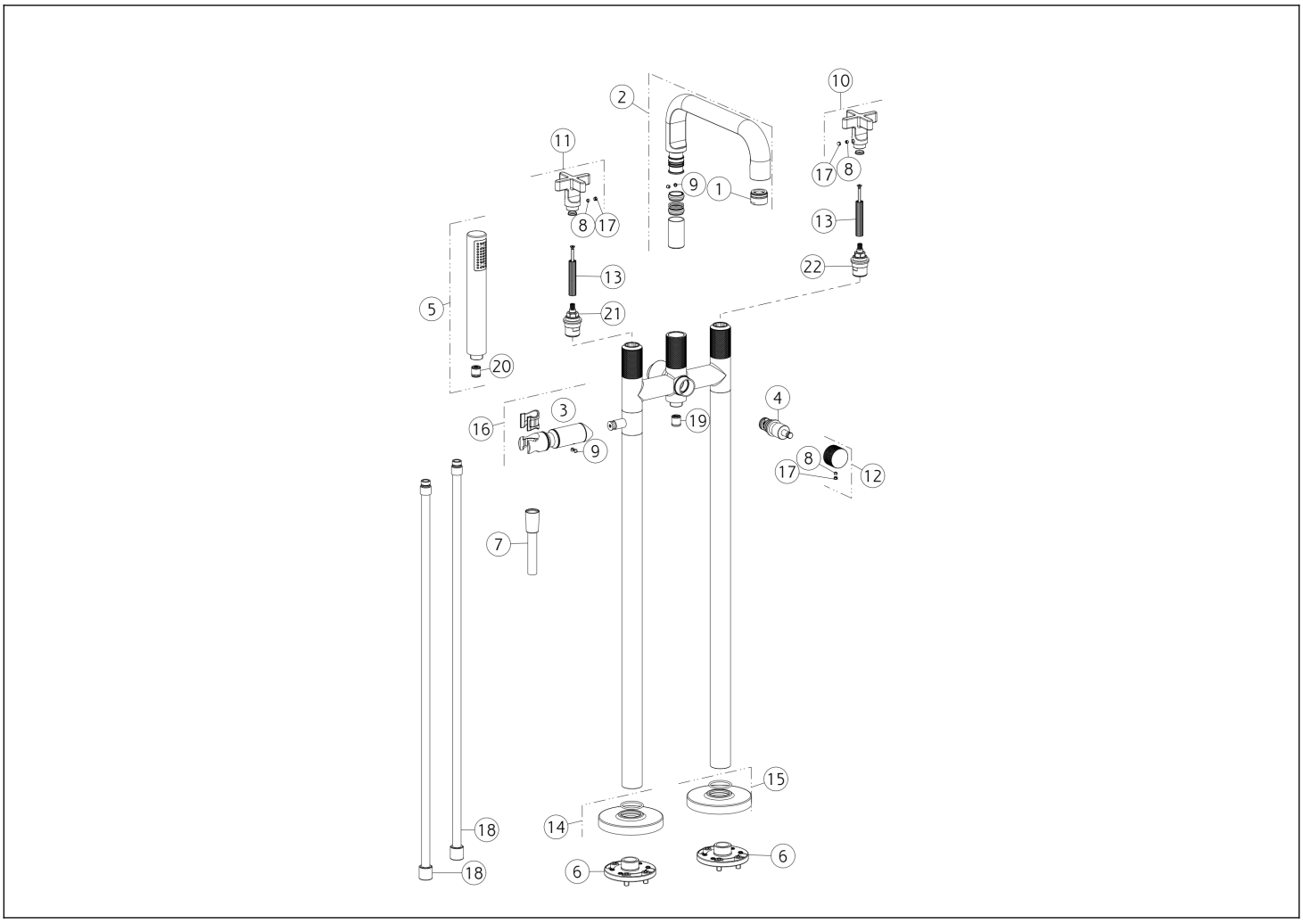

N°	Code	Description
1	SP00853	COMPLETE AERATOR
2	SP02334	COMPLETE SPOUT
3	SP01777	BUSH
4	SP01727	DIVERTER
5	PF14372	HANDSHOWER
6	SP03535	FLANGE
7	PF01637	HOSE
8	SP00137	SCREW
9	SP00610	SCREW
10	SP02260	HANDLE
11	SP02260	HANDLE

N°	Code	Description
12	SP02359	KNOB
13	SP02355	EXTENSION
14	SP02358	COVER
15	SP02358	COVER
16	SP03530	ADJUSTABLE HANDSHOWER HOOK
17	SP00002	SCREW COVER
18	SP02357	TUBE
19	SP00014	NON RETURN VALVE
20	SP01634	FLOW REGOLATOR
21	SP01934	HEADVALVE
22	SP02291	HEADVALVE

Gessi S.p.A. Parco Gessi, 13037 Serravalle Sesia (Vercelli) Italy Tel. +39 0163 454111 Fax. +39 0163 453150 - www.gessi.com - gessi@gessi.it This drawing, as required by law, may not be made public or reproduced without the written authorization of GESSI S.p.A. Copyright GESSI S.p.A.