GESSI

58151

GPF5815110000G000

INCISO

validity date
≥ 04/2023



Wall-mounted Hydrobrush for sanitary ceramics with safety valve and 1/2" connection.

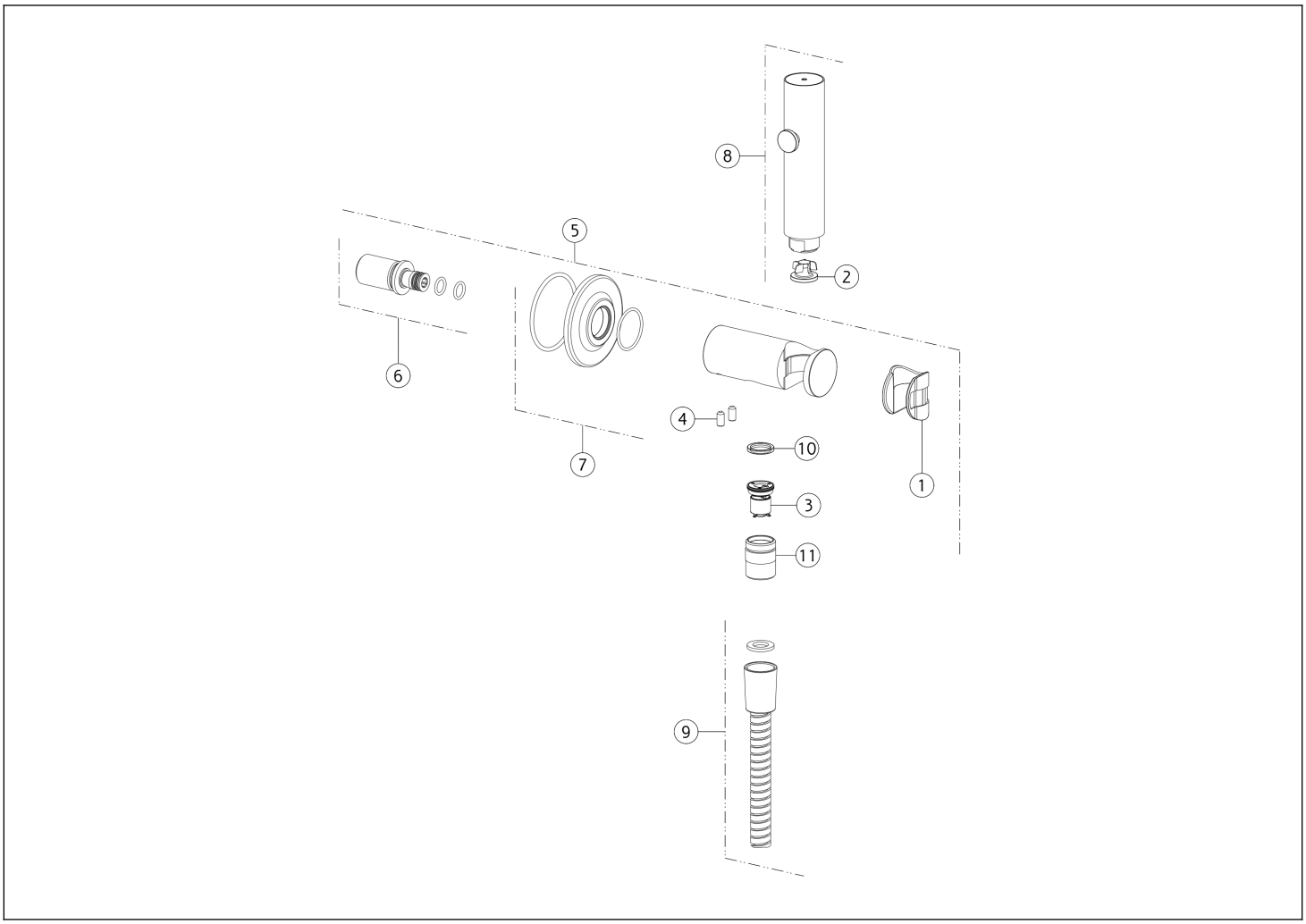

N°	Code	Description
1	SP01823	BUSH
2	SP05471	FLOW LIMITING VALVE
3	SP04270	VALVE
4	SP01352	GRUB SCREW
5	SP02637	CONNECTION WATER OUTLET WITH FIXED HOOK
6	SP01816	NIPPLE

N°	Code	Description
7	SP02345	ROSETTE
8	SP02634	HANDSHOWER
9	SP02636	HOSE
10	SP04574	FILTER GASKET
11	SP04276	NIPPLE

Gessi S.p.A. Parco Gessi, 13037 Serravalle Sesia (Vercelli) Italy Tel. +39 0163 454111 Fax. +39 0163 453150 - www.gessi.com - gessi@gessi.it This drawing, as required by law, may not be made public or reproduced without the written authorization of GESSI S.p.A. Copyright GESSI S.p.A.