GESSI

58189

GPF5818900000G000

INCISO

validity date
≥ 02/2019



Wall-fixing antilimestone and adjustable headshower

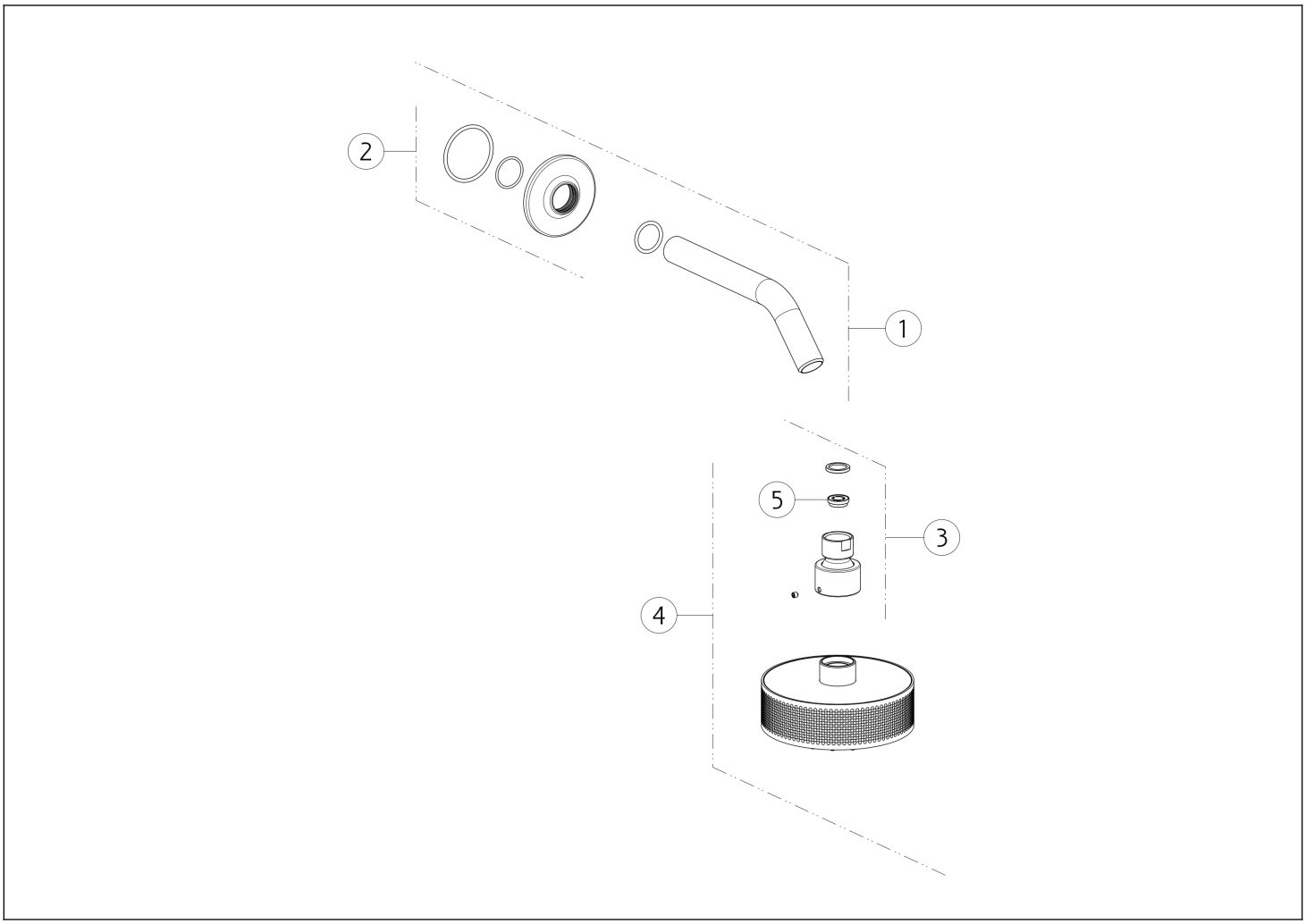

N°	Code	Description
1	SP02391	SHOWER ARM
2	SP01899	COVER
3	SP00244	JOINT

N°	Code	Description
4	SP02390	SHOWERHEAD
5	SP02191	FLOW REGOLATOR

Gessi S.p.A. Parco Gessi, 13037 Serravalle Sesia (Vercelli) Italy Tel. +39 0163 454111 Fax. +39 0163 453150 - www.gessi.com - gessi@gessi.it This drawing, as required by law, may not be made public or reproduced without the written authorization of GESSI S.p.A. Copyright GESSI S.p.A.